State of Rhode Island and Providence Plantations
Department of Administration
Division of Purchases

RIVIP BIDDER CERTIFICATION COVER FORM

SECTION 1 - BIDDER INFORMATION

Bidder must be registered as a vendor on the RIVIP system at www.purchasing.ri.gov to submit a bid proposal.

Solicitation Number:	7549095
Solicitation Title:	FURNISH AND INSTALL 2 GENERATORS - BRISTOL AND MIDDLETOWN ARMORYS (55 PGS)
Bid Proposal Submission Deadline Date & Time:	11/18/2014 10:30 AM
RIVIP Vendor ID #:	893
Bidder Name:	E. W. Audet & Sons, Inc.
Address:	169 Bay Street Providence , RI 02905 USA
Telephone:	401-467-3510
Fax:	401-781-8822
Contact Name:	John Osowa, Jr
Contact Title:	Vice-President
Contact Email:	jack@ewaudet.com

SECTION 2 —DISCLOSURES

Bidders must respond to every statement. Bid proposals submitted without a complete response may be deemed nonresponsive.

Indicate "Y" (Yes) or "N" (No) for Disclosures 1-3, and if "Yes," provide details below. Complete Disclosure 4.

N 1. State whether the Bidder, or any officer, director, manager, stockholder, member, partner, or other owner or principal of the Bidder or any parent, subsidiary, or affiliate has been subject to suspension or debarment by any federal, state, or municipal governmental authority, or the subject of criminal prosecution, or convicted of a criminal offense within the previous 5 years. If "Yes," provide details below.

N 2. State whether the Bidder, or any officer, director, manager, stockholder, member, partner, or other owner or principal of the Bidder or any parent, subsidiary, or affiliate has had any contracts with a federal, state, or municipal governmental authority terminated for any reason within the previous 5 years. If "Yes," provide details below.

N 3. State whether the Bidder, or any officer, director, manager, stockholder, member, partner, or other owner or principal of the Bidder or any parent, subsidiary, or affiliate has been fined more than $5000 for violation(s) of any Rhode Island environmental law(s) by the Rhode Island Department of Environmental Management within the previous 5 years. If "Yes," provide details below.

4. List each officer, director, manager, stockholder, member, partner, or other owner or principal of the Bidder, and each intermediate parent company and the ultimate parent company of the Bidder. For each individual, provide his or her name, business address,

principal occupation, position with the Bidder, and the percentage of ownership, if any, he or she holds in the Bidder, and each intermediate parent company and the ultimate parent company of the Bidder.

Disclosure details (continue on additional sheet if necessary):

Ernest Audet, Jr. - President & Treasurer

John Osowa, Jr. - Vice President

Jeffrey Audet - Secretary

SECTION 3 —CERTIFICATIONS

Bidders must respond to every statement. Bid proposals submitted without a complete response may be deemed nonresponsive.

Indicate "Y" (Yes) or "N" (No), and if "No," provide details below.

THE BIDDER CERTIFIES THAT:

Y 1. The Bidder will immediately disclose, in writing, to the State Purchasing Agent any potential conflict of interest which may occur during the term of any contract awarded pursuant to this solicitation.

Y 2. The Bidder possesses all licenses and anyone who will perform any work will possess all licenses required by applicable federal, state, and local law necessary to perform the requirements of any contract awarded pursuant to this solicitation and will maintain all required licenses during the term of any contract awarded pursuant to this solicitation. In the event that any required license shall lapse or be restricted or suspended, the Bidder shall immediately notify the State Purchasing Agent in writing.

Y 3. The Bidder will maintain all required insurance during the term of any contract pursuant to this solicitation. In the event that any required insurance shall lapse or be canceled, the Bidder will immediately notify the State Purchasing Agent in writing.

Y 4. The Bidder understands that falsification of any information in this bid proposal or failure to notify the State Purchasing Agent of any changes in any disclosures or certifications in this Bidder Certification may be grounds for suspension, debarment, and/or prosecution for fraud.

Y 5. The Bidder has not paid and will not pay any bonus, commission, fee, gratuity, or other remuneration to any employee or official of the State of Rhode Island or any subdivision of the State of Rhode Island or other governmental authority for the purpose of obtaining an award of a contract pursuant to this solicitation. The Bidder further certifies that no bonus, commission, fee, gratuity, or other remuneration has been or will be received from any third party or paid to any third party contingent on the award of a contract pursuant to this solicitation.

Y 6. This bid proposal is not a collusive bid proposal. Neither the Bidder, nor any of its owners, stockholders, members, partners, principals, directors, managers, officers, employees, or agents has in any way colluded, conspired, or agreed, directly or indirectly, with any other bidder or person to submit a collusive bid proposal in response to the solicitation or to refrain from submitting a bid proposal in response to the solicitation, or has in any manner, directly or indirectly, sought by agreement or collusion or other communication with any other bidder or person to fix the price or prices in the bid proposal or the bid proposal of any other bidder, or to fix any overhead, profit, or cost component of the bid price in the bid proposal or the bid proposal of any other bidder, or to secure through any collusion, conspiracy, or unlawful agreement any advantage against the State of Rhode Island or any person with an interest in the contract awarded pursuant to this solicitation. The bid price in the bid proposal is fair and proper and is not tainted by any collusion, conspiracy, or unlawful agreement on the part of the Bidder, its owners, stockholders, members, partners, principals, directors, managers, officers, employees, or agents.

Y 7. The Bidder: (i) is not identified on the General Treasurer's list created pursuant to R.I. Gen. Laws § 37-2.5-3 as a person or entity engaging in investment activities in Iran described in § 37-2.5-2(b); and (ii) is not engaging in any such investment activities in Iran.

Y 8. The Bidder will comply with all of the laws that are incorporated into and/or applicable to any contract with the State of Rhode Island.

Certification details (continue on additional sheet if necessary):

Submission by the Bidder of a bid proposal pursuant to this solicitation constitutes an offer to contract with the State of Rhode Island through the Division of Purchases on the terms and conditions contained in this solicitation and the bid proposal. The Bidder certifies that: (1) the Bidder has reviewed this solicitation and agrees to comply with its terms and conditions; (2) the bid proposal is based on this solicitation; and (3) the information submitted in the bid proposal (including this RIVIP Bidder Certification Cover Form) is accurate and complete. The Bidder acknowledges that the terms and conditions of this solicitation and the bid proposal will be incorporated into any contract awarded to the Bidder pursuant to this solicitation and the bid proposal. The person signing below represents, under penalty of perjury, that he or she is fully informed regarding the preparation and contents of this bid proposal and has been duly authorized to execute and submit this bid proposal on behalf of the Bidder.

BIDDER

Date: November 18, 2014

E.W. Audet & Sons, Inc.
Name of Bidder

Signature in ink

John Osowa, Jr. - Vice President
Printed name and title of person signing on behalf of Bidder

Request for Quote

STATE OF RHODE ISLAND AND PROVIDENCE PLANTATIONS
ONE CAPITOL HILL
PROVIDENCE RI 02908

CREATION DATE : 23-OCT-14
BID NUMBER: 7549095
TITLE: FURNISH AND INSTALL 2 GENERATORS -BRISTOL AND MIDDLETOWN ARMORYS

BID CLOSING DATE AND TIME: 18-NOV-2014 10:30:00

BUYER: Cadoret, David
PHONE #: N/A

BILL TO
DOA CONTROLLER
ONE CAPITOL HILL, 4TH FLOOR
SMITH ST
PROVIDENCE, RI 02908
US

SHIP TO
MS SPECIAL INSTRUCTIONS
SEE BELOW
SEE BELOW, RI N/A
US

Requistion Number:
Note to Bidders: THERE WILL BE A MANDATORY PRE BID. SEE ATTACHED FOR INFORMATION.

Line	Description	Quantity	Unit	Unit Price	Total
1	Furnish & Install (1) 60KW Single Phase 120/240 Volt, 1 phase, 60hz, Industrial Diesel Generator As Per The Attached Specifications. No substitution. Bristol location	1.00	Each	48,950	48,950.00
2	Furnish & Install (1) 60KW Single Phase 120/208 Volt, 1 phase, 60hz, Industrial Diesel Generator As Per The Attached Specifications. No substitution. Middletown location	1.00	Each	51,950	51,950.00

Delivery: As required/requested

Terms of Payment: Net 30

It is the Vendor's responsibility to check and download any and all addenda from the RIVIP. This offer may not be considered unless a signed RIVIP generated Bidder Certification Cover Form is attached and the Unit Price column is completed. The signed Certification Cover Form must be attached to the front of the offer

State of Rhode Island
Department of Administration / Division of Purchases
One Capitol Hill, Providence, Rhode Island 02908-5855
Tel: (401) 574-8100 Fax: (401) 574-8387

BID 7549095
Furnish and Install 2 Generators-Bristol and Middletown Armories

Acknowledgement of addendum(a):

I have received and reviewed the following addendum(a) that pertain to this bid. This sheet must be submitted with your bid proposal. Failure to do so may result in your bid being considered NON-RESPONSIVE.

Addendum Number One **Dated** 11.12.14

Addendum Number _____ **Dated** _____

Addendum Number _____ **Dated** _____

Addendum Number _____ **Dated** _____

Addendum Number _____ **Dated** _____

Signed _____ **Dated** November 18, 2014

Title John Osowa, Jr. - Vice President

Form W-9 (Rev. 3/7/11)

State of Rhode Island
PAYER'S REQUEST FOR TAXPAYER IDENTIFICATION NUMBER AND CERTIFICATION

THE IRS REQUIRES THAT YOU FURNISH YOUR TAXPAYER IDENTIFICATION NUMBER TO US. FAILURE TO PROVIDE THIS INFORMATION CAN RESULT IN A $50 PENALTY BY THE IRS. IF YOU ARE AN INDIVIDUAL, PLEASE PROVIDE US WITH YOUR SOCIAL SECURITY NUMBER (SSN) IN THE SPACE INDICATED BELOW. IF YOU ARE A COMPANY OR A CORPORATION, PLEASE PROVIDE US WITH YOUR EMPLOYER IDENTIFICATION NUMBER (EIN) WHERE INDICATED.

Taxpayer Identification Number (T.I.N.)

Enter your taxpayer identification number in the appropriate box. For most individuals, this is your social security number.

Social Security No. (SSN)			Employer ID No. (EIN)	
			05	0312658

NAME E.W. Audet & Sons, Inc.

ADDRESS 169 Bay Street

(REMITTANCE ADDRESS, IF DIFFERENT)

CITY, STATE AND ZIP CODE Providence, RI 02905

CERTIFICATION: Under penalties of perjury, I certify that:

(1) The number shown on this form is my correct Taxpayer Identification Number (or I am waiting for a number to be issued to me), and
(2) I am not subject to backup withholding because either: (A) I have not been notified by the Internal Revenue Service (IRS) that I am subject to backup withholding as a result of a failure to report all interest or dividends, or (B) the IRS has notified me that I am no longer subject to backup withholding.

Certification Instructions -- You must cross out item (2) above if you have been notified by the IRS that you are subject to backup withholding because of under-reporting interest or dividends on your tax return. However, if after being notified by IRS that you were subject to backup withholding you received another notification from IRS that you are no longer subject to backup withholding, do not cross out item (2).

PLEASE SIGN HERE

SIGNATURE _____ **TITLE** V. President **DATE** 11.18.14 **TEL NO.** 401.467.3510

BUSINESS DESIGNATION:

Please Check One: Individual ☐ Medical Services Corporation ☐ Government/Nonprofit Corporation ☐
Partnership ☐ Corporation ☒ Trust/Estate ☐ Legal Services Corporation ☐

NAME: Be sure to enter your full and correct name as listed in the IRS file for you or your business.

ADDRESS, CITY, STATE AND ZIP CODE: Enter your primary business address and remittance address if different from your primary address). If you operate a business at more than one location, adhere to the following:

1) Same T.I.N. with more than one location -- attach a list of location addresses with remittance address for each location and indicate to which location the year-end tax information return should be mailed.
2) Different T.I.N. for each different location -- submit a completed W-9 form for each T.I.N. and location. (One year-end tax information return will be reported for each T.I.N. and remittance address.)

CERTIFICATION -- Sign the certification, enter your title, date, and your telephone number (including area code and extension).

BUSINESS TYPE CHECK-OFF – Check the appropriate box for the type of business ownership.

Mail to: Supplier Coordinator, One Capitol Hill, Providence, RI 02908

Rhode Island Department of Labor and Training
Division of Workforce Regulation and Safety

TELECOMM CORPORATION DATA TSC
VIDEO TSC
TELEP TSC
LIC# 2859 SOUND TSC
E W AUDET & SONS INC
ERNEST W AUDET JR
169 BAY STREET
PROVIDENCE RI 02905

Administrator

12/31/2015
Expiration Date

Rhode Island Department of Labor and Training
Division of Workforce Regulation and Safety

ELECTRICAL CONTRACTOR A-001320
JOURNEY ELECTRICIAN A B-004441

ERNEST W AUDET JR
169 BAY STREET
PROVIDENCE RI 02905

Administrator

12/31/2015
Expiration Date

Rhode Island Department of Labor and Training
Division of Workforce Regulation and Safety

ELECTRICAL CORP A001320
A-001320 B-004441
E W AUDET & SON INC

ERNEST W AUDET JR
169 BAY STREET
PROVIDENCE RI 02905

Administrator

12/31/2015
Expiration Date

THE AMERICAN INSTITUTE OF ARCHITECTS

AIA Document A310

Bid Bond

KNOW ALL MEN BY THESE PRESENTS, that we **E. W. AUDET & SONS, INC., of 169 Bay Street, Providence, Rhode Island** as Principal, hereinafter called the Principal, and **ARCH INSURANCE COMPANY** a corporation duly organized under the laws of the State of **Missouri**
as Surety, hereinafter called the Surety, are held and firmly bound unto **STATE OF RHODE ISLAND**

as Obligee, hereinafter called the Obligee, in the sum of **Five Percent of the Amount of Attached Bid**
Dollars (**$ 5% of Bid**),
for the payment of which sum well and truly to be made, the said Principal and the said Surety, bind ourselves, our heirs, executors, administrators, successors and assigns, jointly and severally, firmly by these presents.

WHEREAS, the Principal has submitted a bid for **Furnish & Install (2) Generators – Bristol and Middletown Armorys; Project No. 7549095**

NOW, THEREFORE, if the Obligee shall accept the bid of the Principal and the Principal shall enter into a Contract with the Obligee in accordance with the terms of such bid, and give such bond or bonds as may be specified in the bidding or Contract Documents with good and sufficient surety for the faithful performance of such Contract and for the prompt payment of labor and material furnished in the prosecution thereof, or in the event of the failure of the Principal to enter such Contract and give such bond or bonds, if the Principal shall pay to the Obligee the difference not to exceed the penalty hereof between the amount specified in said bid and such larger amount for which the Obligee may in good faith contract with another party to perform the Work covered by said bid, then this obligation shall be null and void, otherwise to remain in full force and effect.

Signed and sealed this **18th** day of **November, 2014**

Katherine Sweeney

Denise A Chaney

E. W. AUDET & SONS, INC.
(Principal) *(Seal)*

By: _____
(Title)
John Osowa, Jr. - Vice President

ARCH INSURANCE COMPANY
(Surety) *(Seal)*

By: _____
David J. Byrne, III, *(Title)* **Attorney-in-Fact**

POWER OF ATTORNEY

Know All Men By These Presents:

That the Arch Insurance Company, a corporation organized and existing under the laws of the State of Missouri, having its principal office in Kansas City, Missouri (hereinafter referred to as the "Company") does hereby appoint

David J. Byrne, III and Charles A. Byrne of East Providence, RI (EACH)

its true and lawful Attorney(s)-in-Fact, to make, execute, seal, and deliver from the date of issuance of this power for and on its behalf as surety, and as its act and deed:

Any and all bonds and undertakings

EXCEPTION: NO AUTHORITY is granted to make, execute, seal and deliver bonds or undertakings that guarantee the payment or collection of any promissory note, check, draft or letter of credit.

This authority does not permit the same obligation to be split into two or more bonds in order to bring each such bond within the dollar limit of authority as set forth herein.

The Company may revoke this appointment at any time.

The execution of such bonds and undertakings in pursuance of these presents shall be as binding upon the said Company as fully and amply to all intents and purposes, as if the same had been duly executed and acknowledged by its regularly elected officers at its principal office in Kansas City, Missouri.

This Power of Attorney is executed by authority of resolutions adopted by unanimous consent of the Board of Directors of the Company on March 3, 2003, true and accurate copies of which are hereinafter set forth and are hereby certified to by the undersigned Secretary as being in full force and effect:

"VOTED, That the Chairman of the Board, the President, or any Vice President, or their appointees designated in writing and filed with the Secretary, or the Secretary shall have the power and authority to appoint agents and attorneys-in-fact, and to authorize them to execute on behalf of the Company, and attach the seal of the Company thereto, bonds and undertakings, recognizances, contracts of indemnity and other writings, obligatory in the nature thereof, and any such officers of the Company may appoint agents for acceptance of process."

This Power of Attorney is signed, sealed and certified by facsimile under and by authority of the following resolution adopted by the unanimous consent of the Board of Directors of the Company on March 3, 2003:

VOTED, That the signature of the Chairman of the Board, the President, or any Vice President, or their appointees designated in writing and filed with the Secretary, and the signature of the Secretary, the seal of the Company, and certifications by the Secretary, may be affixed by facsimile on any power of attorney or bond executed pursuant to the resolution adopted by the Board of Directors on March 3, 2003, and any such power so executed, sealed and certified with respect to any bond or undertaking to which it is attached, shall continue to be valid and binding upon the Company.

In Testimony Whereof, the Company has caused this instrument to be signed and its corporate seal to be affixed by their authorized officers, this 14th day of June, 20 10.

Attested and Certified

Arch Insurance Company

Arch Insurance Company CORPORATE SEAL 1971 Missouri

Martin J. Nilsen, Secretary

J. Michael Pete, Vice President

STATE OF PENNSYLVANIA SS

COUNTY OF PHILADELPHIA SS

I, Brian C. Kuhn, a Notary Public, do hereby certify that Martin J. Nilsen and J. Michael Pete personally known to me to be the same persons whose names are respectively as Secretary and Vice President of the Arch Insurance Company, a Corporation organized and existing under the laws of the State of Missouri, subscribed to the foregoing instrument, appeared before me this day in person and severally acknowledged that they being thereunto duly authorized signed, sealed with the corporate seal and delivered the said instrument as the free and voluntary act of said corporation and as their own free and voluntary acts for the uses and purposes therein set forth.

COMMONWEALTH OF PENNSYLVANIA
NOTARIAL SEAL
Brian C. Kuhn, Notary Public
City of Philadelphia, Philadelphia County
My commission expires December 06, 2011

Brian C. Kuhn, Notary Public
My commission expires 12-06-2011

CERTIFICATION

I, Martin J. Nilsen, Secretary of the Arch Insurance Company, do hereby certify that the attached Power of Attorney dated June 14, 2010 on behalf of the person(s) as listed above is a true and correct copy and that the same has been in full force and effect since the date thereof and is in full force and effect on the date of this certificate; and I do further certify that the said J. Michael Pete, who executed the Power of Attorney as Vice President, was on the date of execution of the attached Power of Attorney the duly elected Vice President of the Arch Insurance Company.

IN TESTIMONY WHEREOF, I have hereunto subscribed my name and affixed the corporate seal of the Arch Insurance Company on this 18th day of November, 20 14.

Martin J. Nilsen, Secretary

This Power of Attorney limits the acts of those named therein to the bonds and undertakings specifically named therein and they have no authority to bind the Company except in the manner and to the extent herein stated.

PLEASE SEND ALL CLAIM INQUIRIES RELATING TO THIS BOND TO THE FOLLOWING ADDRESS:

Arch Surety
3 Parkway, Ste. 1500
Philadelphia, PA 19102

Arch Insurance Company CORPORATE SEAL 1971 Missouri

00ML0013 00 03 03

Printed in U.S.A.

KOHLER POWER SYSTEMS

KRAFTPOWER
The power of performance.

KRAFT POWER CORPORATION

199 WILDWOOD AVENUE / WOBURN MA 01801

P: 888-925-7238 F: 781-933-7812

Submittal Package

Job Name: Middleton and Bristol
Quote: 0026098709
Proposal:

We are pleased to offer the following submittal for your consideration.
Thank you, William Hafferty, Kraft Power Corp

KOHLER POWER SYSTEMS

TABLE OF CONTENTS

Section	Sub-Section	Literature
Quote		
Model 60REOZJD Spec Sheets		
Model 60REOZJD Spec Sheets		
Alternator Data		
	Alternator Data Sheet	4P7BX
Sound Data		
	Sound Data Sheet	Sound Data
Emissions Data		
	Emissions Data	Emissions Data
	EPA Certificate	EPA Certificate
Dimensional Drawings		
	Generator	ADV-7973
	Accessories	ADV-7984
	Controller	ADV-7935
	Enclosure	ADV-7429
	Subbase Tank	ADV-8517
Wiring Schematic Diagrams		
	Controller Schematic Diagram	ADV-8039
	Controller Wiring Diagram	GM78240
	Interconnection Diagram	GM78246
	Remote Serial Annunciator	ADV-6990
	Remote Serial Annunciator	GM62554
Misc		
	Battery Charger	ADV-5971
	Battery Charger Assembly	233967
	Battery Heater	336814
	Battery Heater	336825
	Battery Heater	HF-273000
	Block Heater	326220
	Block Heater	GM58098
	Circuit Breaker	GM47476
Warranty		
	Warranty	TP-5374
	Warranty	TP-5497
Certification		
	ISO9001 Certificate	G15-152
	Prototype Test Certificate	G18-56
Pre-Startup Checklist		
	Pre-Startup Checklist	PreStartUpCheckList

KRAFT POWER CORPORATION

199 WILDWOOD AVENUE / WOBURN MA 01801

P: 888-925-7238 F: 781-933-7812

GENERATOR SET

Model: 60REOZJD
This generator set equipped with a 4P7BX alternator operating at 120/208 volts is rated for 54 kW/68 kVA.
Output amperage: 187

Configuration

Qty	Description
1	60REOZJD Generator Set
1	60REOZJD, 12V, 60HZ, TIER III
1	Nameplate Rating, Standby 130 Degree
1	Decal, UL2200 Listing (Diesel)
1	Voltage,60Hz,120/208V,3Ph,4W,0.8PF
1	Alternator & Mtg, 4P7BX
1	Cooling, Unit Mtd Radiator 50C
1	Skid/Tank, 4P7BX & 4P8X, 130 Gal
1	Air Intake, Standard Duty
1	Controller, DEC3000, 400A, 3Ph
1	Control & Harness, DEC3000
1	Accessory Inner Panel
1	Sound Enclosure, Crit Sil, 41"
1	Block Heater
1	Run Relay, 12V
1	DEC3000 2Input/5Output
1	Breaker 1 Right Components
1	LCB, 250A, JDP, Therm Mag, 80%
1	Mtg, LCB J-Frame, 250A 3-Pole, 4P
1	Covers, 4P J-Box H/J-Frame LCB
1	Neutral, 300A. 4P.
1	Decals, Bonding & Phasing
1	Flexible Fuel Lines
1	Inner Tank Leak Alarm
1	Air Cleaner Restriction Ind
1	Coolant in Genset 5 gals.
1	Battery Charger,Float w/Alarms,12V-10A
1	Battery Heater, 120V, 110W
1	Lit Kit, Production, 60REOZJD
1	Warranty, 2 Year Basic
1	Warranty, 1 Year Standby

KRAFTPOWER
The power of performance.

KRAFT POWER CORPORATION

199 WILDWOOD AVENUE / WOBURN MA 01801

P: 888-925-7238 F: 781-933-7812

1 RSA III, Annuciator only

GENERATOR SET

Model: 60REOZJD
This generator set equipped with a 4P7BX alternator operating at 120/240 volts is rated for 44 kW/44 kVA.
Output amperage: 183

Configuration

Qty	Description
1	60REOZJD Generator Set
1	60REOZJD, 12V, 60HZ, TIER III
1	Nameplate Rating, Standby 130 Degree
1	Decal, UL2200 Listing (Diesel)
1	Voltage,60Hz,120/240V,1Ph,3W,1.0PF
1	Alternator & Mtg, 4P7BX
1	Cooling, Unit Mtd Radiator 50C
1	Skid/Tank, 4P7BX & 4P8X, 130 Gal
1	Air Intake, Standard Duty
1	Controller, DEC3000, 400A, 3Ph
1	Control & Harness, DEC3000
1	Accessory Inner Panel
1	Sound Enclosure, Crit Sil, 41"
1	Block Heater
1	Run Relay, 12V
1	DEC3000 2Input/5Output
1	Breaker 1 Right Components
1	LCB, 225A, JDP, Therm Mag, 80%
1	Mtg, LCB J-Frame, 175-225A 3-Pole, 4P
1	Covers, 4P J-Box H/J-Frame LCB
1	Neutral, 300A. 4P.
1	Decals, Bonding & Phasing
1	Flexible Fuel Lines
1	Inner Tank Leak Alarm
1	Air Cleaner Restriction Ind
1	Coolant in Genset 5 gals.
1	Battery Charger,Float w/Alarms,12V-10A
1	Lit Kit, General Maint, 60REOZJD
1	Warranty, 2 Year Basic
1	Warranty, 1 Year Standby
1	RSA III, Annuciator only

KRAFT POWER CORPORATION

199 WILDWOOD AVENUE / WOBURN MA 01801

P: 888-925-7238 F: 781-933-7812

KOHLER POWER SYSTEMS

Spec Sheets

60REOZJD

Diesel

KOHLER POWER SYSTEMS

ISO 9001
KOHLER POWER SYSTEMS
NATIONALLY REGISTERED

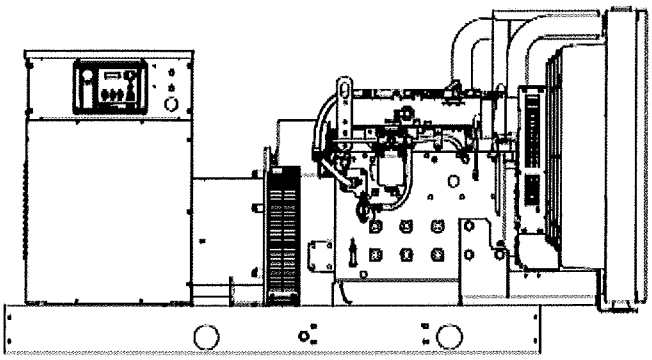

Standard Features

- Kohler Co. provides one-source responsibility for the generating system and accessories.
- The generator set and its components are prototype-tested, factory-built ,and production-tested.
- The 60 Hz generator set offers a UL 2200 listing.
- The generator set accepts rated load in one step.
- The 60 Hz generator set meets NFPA 110, Level 1, when equipped with the necessary accessories and installed per NFPA standards.
- A one-year limited warranty covers all systems and components. Two-, five-, and ten-year extended warranties are also available.
- Tier 3 EPA-certified for Stationary Emergency Applications
- Alternator Features:
  - The unique Fast-Response X excitation system delivers excellent voltage response and short circuit capability using a rare-earth permanent magnet (PM)-excited alternator.
  - The brushless, rotating-field alternator has broad range reconnectability.
- Other Features:
  - Kohler designed controllers for guaranteed system integration and remote communication. See controller features inside.
  - The low coolant level shutdown prevents overheating (standard on radiator models only).
  - Integral vibration isolation eliminates the need for under-unit vibration spring isolators.

Generator Set Ratings

				Standby130C Ratings	
Alternator	**Voltage**	**Ph**	**Hz**	**kW/kVA**	**Amps**
4P7BX	120/208	3	60	54/68	187

RATINGS: All three-phase units are rated at 0.8 power factor. All single-phase units are rated at 1.0 power factor. Standby Ratings: The standby rating is applicable to varying loads for the duration of a power outage. There is no overload capability for this rating. Prime Power Ratings: At varying load, the number of generator set operating hours is unlimited. A 10% overload capacity is available for one hour in twelve. Ratings are in accordance with ISO-8528-1 and ISO-3046-1. For limited running time and continuous ratings, consult the factory. Obtain technical information bulletin (TIB-101) for ratings guidelines, complete ratings definitions, and site condition derates. The generator set manufacturer reserves the right to change the design or specifications without notice and without any obligation or liability whatsoever.

Model: 60REOZJD, continued

Alternator Specifications

Specifications	Alternator
Alternator manufacturer	Kohler
Type	4-Pole, Rotating-Field
Exciter type	Brushless, Rare-Earth Permanent-Magnet
Leads, quantity	4P_X: 12, Reconnectable 4, 110-120/220-240, 4Q_X: 4, 110-120/220-240
Voltage regulator	Solid State, Volts/Hz
Insulation	NEMA MG1
Insulation: Material	Class H
Insulation: Temperature Rise	130°C, Standby
Bearing: quantity, type	1, Sealed
Coupling	Flexible disc
Amortisseur windings	Full
Voltage regulation, no-load to full-load RMS	Controller Dependent
One-Step Load Acceptance	100% of rating
Unbalanced load capability	100% of Rated Standby Current

- Sustained short-circuit current of up to 300% of the rated current for up to 10 seconds.
- Sustained short-circuit current enabling down stream circuit breakers to trip without collapsing the alternator field.
- Self-ventilated and dripproof construction.
- Vacuum-impregnated windings with fungus-resistant epoxy varnish for dependability and long life.
- Superior voltage waveform from a two-thirds pitch stator and skewed rotor.
- Fast-Response™ II brushless alternator with brushless exciter for excellent load response.

Engine

Engine Specifications	
Engine Manufacturer	John Deere
Engine Model	5030HF285G
Engine: type	4-Cycle, Turbocharged
Cylinder arrangement	5 Inline
Displacement, L (cu. in.)	3.0 (186)
Bore and stroke, mm (in.)	86 x 105 (3.39 x 4.13)
Compression ratio	18.2:1
Piston speed, m/min. (ft./min.)	375 (1230)
Main bearings: quantity, type	6, Replaceable Insert
Rated rpm	1800
Max. power at rated rpm, kWm (BHP)	72 (96)
Cylinder head material	Cast Iron
Crankshaft material	Ductile Iron
Valve (exhaust) material Intake	Chromium-Silicon Steel
Valve (exhaust) material Exhaust	Stainless Steel
Governor: type, make/model	JDEC Electronic, Level 18 EUP
Frequency regulation, no-load to-full load	Isochronous
Frequency regulation, steady state	±0.25%
Frequency	Field-Convertible
Air cleaner type, all models	Dry

Model: 60REOZJD, continued

Exhaust

Exhaust System	
Exhaust Manifold Type	Dry
Exhaust flow at rated kW, m³/min. (cfm)	13.8 (488)
Exhaust temperature at rated kW, dry exhaust, °C (°F)	524 (976)
Maximum allowable back pressure, kPa (in. Hg)	7.5 (2.2)
Exh. outlet size at eng. hookup, mm (in.)	64.0 (2.5)

Engine Electrical

Engine Electrical System	
Battery charging alternator:	
Ground (negative/positive)	Negative
Volts (DC)	12
Ampere rating	70
Starter motor rated voltage (DC)	12
Battery, recommended cold cranking amps (CCA):	
Qty., CCA rating each	One, 640
Battery voltage (DC)	12

Fuel

Fuel System	
Fuel type	Diesel
Fuel supply line, min. ID, mm (in.)	11.0 (0.44)
Fuel return line, min. ID, mm (in.)	6.0 (0.25)
Max. lift, engine-driven fuel pump, m (ft.)	3.0 (10.0)
Max. fuel flow, Lph (gph)	82 (21.7)
Max. return line restriction, kPa (in. Hg)	35 (10.3)
Fuel prime pump	Manual
Fuel Filter Secondary	5 Microns @ 98% Efficiency
Fuel Filter Water Separator	Yes
Recommended fuel	#2 Diesel

Lubrication

Lubrication System	
Type	Full Pressure
Oil pan capacity, L (qt.)	10.4 (11.0)
Oil pan capacity with filter, L (qt.)	11.3 (11.9)
Oil filter: quantity, type	1, Cartridge
Oil cooler	Water-Cooled

Model: 60REOZJD, continued

Cooling

Radiator System	
Ambient temperature, °C (°F)	50 (122)
Engine jacket water capacity, L (gal.)	3.4 (0.9)
Radiator system capacity, including engine, L (gal.)	11.0 (2.9)
Engine jacket water flow, Lpm (gpm)	98 (26)
Heat rejected to cooling water at rated kW, dry exhaust, kW (Btu/min.)	45.9 (2612)
Heat rejected to air charge cooler at rated kW, dry exhaust, kW (Btu/min.)	13.0 (740)
Water pump type	Centrifugal
Fan diameter, including blades, mm (in.)	597 (23.5)
Fan, kWm (HP)	1.2 (1.6)
Max. restriction of cooling air, intake and discharge side of radiator, kPA (in. H20)	0.125 (0.5)

* Enclosure reduces ambient temperature capability by 5°C (9°F).

Operation Requirements

Air Requirements	
Radiator-cooled cooling air, m³/min. (scfm) *	96 (3400)
Combustion air, m³/min. (cfm)	5.3 (187)
Heat rejected to ambient air: Engine, kW (Btu/min.)	15.5 (880)
Heat rejected to ambient air: Alternator, kW (Btu/min.)	8.9 (505)

*Air density = 1.20 kg/m³ (0.075 lbm/ft³)

Fuel Consumption

Diesel, Lph (gph), at % load	Rating
Standby Fuel Consumption at 100% load	19.1 Lph (5.0 gph)
Standby Fuel Consumption at 75% load	14.4 Lph (3.8 gph)
Standby Fuel Consumption at 50% load	10.1 Lph (2.7 gph)
Standby Fuel Consumption at 25% load	6.0 Lph (1.6 gph)
Prime Fuel Consumption at 100% load	17.5 Lph (4.6 gph)
Prime Fuel Consumption at 75% load	13.1 Lph (3.5 gph)
Prime Fuel Consumption at 50% load	9.2 Lph (2.4 gph)
Prime Fuel Consumption at 25% load	5.8 Lph (1.5 gph)

Model: 60REOZJD, continued

Dimensions and Weights

Overall Size, L x W x H, mm (in.): Wide Skid	2300 x 1041 x 1133 (90.55 x 40.98 x 44.61)
Overall Size, L x W x H, mm (in.): Narrow Skid	1998 x 780 x 1067 (78.66 x 30.71 x 42.01)
Weight (radiator model), wet, kg (lb.):	815 (1794)

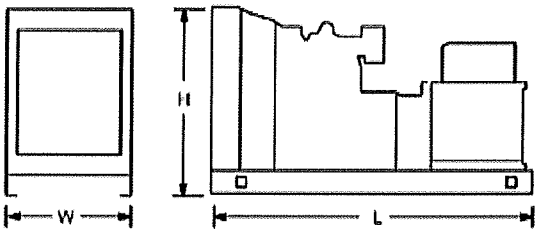

NOTE: This drawing is provided for reference only and should not be used for planning installation. Contact your local distributor for more detailed information.

KOHLER. Power Systems

Generator Set Controller

ISO 9001
KOHLER. POWER SYSTEMS
NATIONALLY REGISTERED

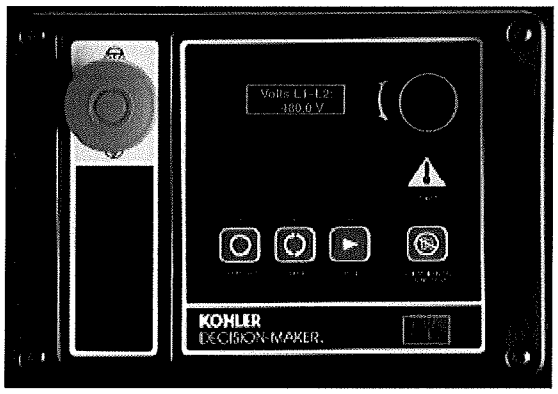

Decision-Maker® 3000

Kohler® Decision-Maker® 3000 Controller

General Description and Function

The Decision-Maker® 3000 generator set controller provides advanced control, system monitoring, and system diagnostics for optimum performance.

The Decision-Maker® 3000 controller meets NFPA 110, Level 1 when equipped with the necessary accessories and installed per NFPA standards.

The Decision-Maker® 3000 controller uses a patented hybrid voltage regulator and unique software logic to manage alternator thermal overload protection features normally requiring additional hardware. Additional features include:

- A digital display and pushbutton/rotary selector dial provide easy local access to data.
- Measurements selectable in metric or English units.
- The controller can communicate directly with a personal computer via a network or serial configuration using SiteTech™ or Monitor III software.
- The controller supports Modbus® protocol. Use with serial bus or Ethernet networks.
- Scrolling display shows critical data at a glance.
- Digital display of power metering (kW and kVA).
- Integrated hybrid voltage regulator providing ±0.5% regulation.
- Built-in alternator thermal overload protection.

Modbus® is a registered trademark of Schneider Electric.

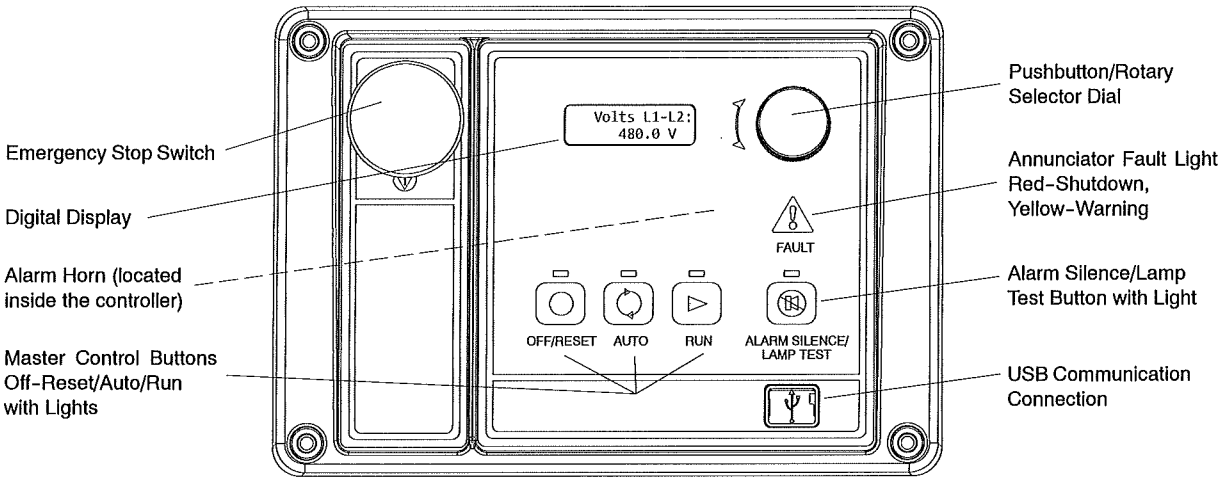

User Interface Controls and Components

- Emergency stop switch
- Backlit LCD digital display with two lines of 12 characters *(see User Interface Displays for menus)*
- Alarm horn indicates generator set shutdown and warning faults
- Environmentally sealed membrane keypad with three master control buttons with lights
  - Off/Reset (red)
  - Auto (green)
  - Run (yellow)
- Pushbutton/rotary selector dial for menu navigation
  - Rotate dial to access main menus
  - Push dial and rotate to access sub menus
  - Press dial for 3 seconds to return to top of main menu
- Annunciator fault light
  - System shutdown (red)
  - System warning (yellow)
- Alarm silence/lamp test button
  - Alarm silence
  - Lamp test
- USB and RS-485 connections
  - Allows software upgrades
  - Provides access for diagnostics
  - PC communication using SiteTech™ or Monitor III software
- Dedicated user inputs
  - Remote emergency stop switch
  - Remote 2-wire start for transfer switch
  - Auxiliary shutdown
- Integrated hybrid voltage regulator
- Auto-resettable circuit protection mounted on circuit board.
- One relay output standard. Optional five relay output available.
- One analog and three digital inputs standard. Optional two inputs available.

NFPA 110 Requirements

In order to meet NFPA 110, Level 1 requirements, the generator set controller monitors the engine/generator functions/faults shown below.

- Engine functions:
  - Overcrank
  - Low coolant temperature warning
  - High coolant temperature warning
  - High coolant temperature shutdown
  - Low oil pressure shutdown
  - Low oil pressure warning
  - High engine speed
  - Low fuel (level or pressure) *
  - Low coolant level
  - EPS supplying load
  - High battery voltage
  - Low battery voltage
- General functions:
  - Master switch not in auto
  - Battery charger fault *
  - Lamp test
  - Contacts for local and remote common alarm
  - Audible alarm silence button
  - Remote emergency stop *

* Function requires optional input sensors or kits and is engine dependent, see Controller Displays as Provided by the Engine ECM.

User Interface Displays

The listing below has • denoting main menus and ○ denoting sub-menus.

- Overview
  - Software version
  - Active shutdowns and warnings (if any are present)
  - Engine run time, total hours
  - Average voltage line-to-line
  - Frequency
  - Average current
  - Coolant temperature
  - Fuel level or pressure *
  - Oil pressure
  - Battery voltage
- Engine Metering
  - Engine speed
  - Oil pressure
  - Coolant temperature
  - Battery voltage
- Generator Metering
  - Total power, VA
  - Total power, W
  - Rated power, %
  - Voltage, L-L and L-N for all phases
  - Current, L1, L2, L3
  - Frequency
- GenSet Information
  - Generator set model number
  - Generator set serial number
  - Controller serial number
- GenSet Run Time
  - Engine run time, total hours
  - Engine loaded, hours
  - Number of engine starts
  - Total energy, kWh
- GenSet System
  - System voltage
  - System frequency, 50 or 60 Hz
  - System phase, single or three (wye or delta)
  - Power rating, kW
  - Amp rating
  - Power type, standby or prime
  - Measurement units, metric or English (user selectable)
  - Alarm silence, always or auto only (NFPA 110)
  - Manual speed adjust *
- GenSet Calibration
  - Voltage, L-L and L-N for all phases
  - Current, L1, L2, L3
  - Reset calibration
- Voltage Regulation
  - Adjust voltage, ±10%
- Digital Inputs
  - Input settings and status
- Digital Outputs
  - Output settings and status
- Analog Inputs
  - Input settings and status
- Event Log
  - Event history (stores up to 1000 system events)
- Selector Switch (requires initial activation by SiteTech™)

* Function requires optional input sensors or kits and is engine dependent, see Controller Displays as Provided by the Engine ECM.

Controller Features

- **AC Output Voltage Regulator Adjustment.** The voltage adjustment provides a maximum of ±10% of the system voltage.
- **Alarm Silence.** The controller can be set up to silence the alarm horn only when in the AUTO mode for NFPA-110 application or Always for user convenience.
- **Alternator Protection.** The controller provides generator set overload and short circuit protection matched to each alternator for the particular voltage/phase configuration.
- **Automatic Restart.** The controller automatic restart feature initiates the start routine and recrank after a failed start attempt.
- **Common Failure Relay.** This relay is integrated on the controller circuit board. Contacts are rated 2 amps at 32 VDC or 0.5 amp at 120 VAC.
- **Communication.** Controller communication is available.
- **Cyclic Cranking.** The controller has programmable cyclic cranking.
- **ECM Diagnostics.** The controller displays engine ECM fault code descriptions to help in engine troubleshooting.
- **Engine Start Aid.** The starting aid feature provides control for an optional engine starting aid.
- **Event Logging.** The controller keeps a record (up to 1000 entries) for warning and shutdown faults. This fault information becomes a stored record of system events and can be reset.
- **Historical Data Logging.** Total number of generator set successful starts is recorded and displayed.
- **Integrated Hybrid Voltage Regulator.** The voltage regulator provides ±0.5% no-load to full-load regulation with three-phase sensing.
- **Lamp Test.** Press the alarm silence/lamp test button to verify functionality of the indicator lights.
- **LCD Display.** Adjustable contrast for improving visibility.
- **Measurement Units.** The controller provides selection of English or metric displays.
- **Power Metering.** Controller digital display provides kW and kVA.
- **Programming Access (USB).** Provides software upgrades and diagnostics.
- **Remote Reset.** The remote reset function resets faults and allows restarting of the generator set without going to the master control switch off/reset position.
- **RSA II Remote Monitoring Panel.** The controller is compatible with the Kohler® Remote Serial Annunciator (RSA II).
- **Run Time Hourmeter.** The generator set run time is displayed.
- **Time Delay Engine Cooldown (TDEC).** The TDEC provides a time delay before the generator set shuts down.
- **Time Delay Engine Start (TDES).** The TDES provides a time delay before the generator set starts.
- **Voltage Selection Menu.** This menu provides the capability of quickly switching controller voltage calibrations. Requires initial activation using SiteTech™ software. **NOTE:** Generator set output leads require voltage reconnection.

Controller Functions

The following chart shows which functions cause a warning or shutdown. All functions are available as relay outputs.

Warning causes the fault light to show yellow and sounds the alarm horn signaling an impending problem.

Shutdown causes the fault light to show red, sounds the alarm horn, and stops the generator set.

	Warning Function	Shutdown Function
Engine Functions		
Critically high fuel level *	○	
ECM communication loss		●
ECM diagnostics	●	●
Engine over speed		●†
Engine start aid active		
Engine under speed		●
Fuel tank leak *	○	○
High battery voltage	●	
High coolant temperature	●	●†
High fuel level *	○	
Low battery voltage	●	
Low coolant level		●
Low coolant temperature	●	
Low cranking voltage	●	
Low engine oil level *	○	○
Low fuel level (diesel models) *	○	○
Low fuel pressure (gas models) *	○	
Low oil pressure	●	●†
No coolant temperature signal		●
No oil pressure signal		●
Overcrank		●†
Speed sensor fault	●	
General Functions		
Alarm horn silenced		
Analog inputs	○	○
Battery charger fault *	●	
Chicago code active *		
Common fault **(includes †)**		●
Common warning	●	
Digital inputs	○	○
Emergency stop		●†
Engine cooldown (delay) active		
Engine start delay active		
Engine started		
Engine stopped		
EPS supplying load		
Generator running		
Input/output communication loss	●	
Internal failure		●
Master switch not in auto	●	
NFPA 110 alarm active		
Remote start		
System ready		
Generator Functions		
AC sensing loss	●	●
Alternator protection		●
Ground fault input *	●	
kW overload		●
Locked rotor		●
Overfrequency		●
Overvoltage (each phase)		●
Underfrequency		●
Undervoltage (each phase)		●

● Standard functions
○ Available user functions
* Function requires optional input sensors or kits and is engine dependent, see Controller Displays as Provided by the Engine ECM.
† Items included with common fault shutdown

KOHLER CO., Kohler, Wisconsin 53044 USA
Phone 920-457-4441, Fax 920-459-1646
For the nearest sales and service outlet in the
US and Canada, phone 1-800-544-2444
KOHLERPower.com

Kohler Power Systems
Asia Pacific Headquarters
7 Jurong Pier Road
Singapore 619159
Phone (65) 6264-6422, Fax (65) 6264-6455

Controller Displays as Provided by the Engine ECM (availability subject to change by the engine manufacturer)						
Display	**GM/PSI**	**Doosan**	**John Deere (JDEC)**	**Volvo (EMS II)**	**Volvo (EDC III)**	**DD/MTU (ADEC)**
Ambient temperature		X				
Charge air pressure	X	X		X	X	X
Charge air temperature	X	X	X	X	X	
Coolant level				X	X	X
Coolant pressure				X	X	
Coolant temperature	X	X	X	X	X	X
Crankcase pressure				X	X	
ECM battery voltage	X	X				X
ECM fault codes	X	X	X	X	X	X
ECM serial number						X
Engine model number			X			X
Engine serial number			X			X
Engine speed	X	X	X	X	X	X
Fuel pressure				X	X	
Fuel rate	X	X	X	X	X	X
Fuel temperature			X	X	X	X
Oil level					X	
Oil pressure	X	X	X	X	X	X
Oil temperature				X	X	X
Trip fuel				X	X	X

Controller Specifications

Decision-Maker® 3000—Software Version 3.11 or higher

- Power source with circuit protection: 12- or 24-volt DC
- Power drain: 200 milliamps
- Humidity range: 5% to 95% noncondensing
- Operating temperature range: -40°C to +70°C (-40°F to +158°F)
- Storage temperature range: -40°C to +85°C (-40°F to +185°F)
- Standards:
  - CE Directive
  - NFPA 99
  - NFPA 110, Level 1
  - CSA 282-09
  - UL 508
  - ASTM B117 (salt spray test)
- Panel dimensions—W x H, 229 x 160 mm (9.0 x 6.3 in.)

Communication and PC Software Available Options

Refer to G6-76 Monitor III Software and the communication literature for additional communication and PC software information including Modbus® communication.

- ❑ **Monitor III Software for Monitoring and Control (Windows®-based user interface)**
- ❑ **Converter, Modbus®/Ethernet.** Supports a power system using controllers accessed via the Ethernet. Converter is supplied with an IP address by the site administrator. Refer to G6-79 for converter details.
- ❑ **Converter, RS-232/RS-485.** Supports a power system using controllers accessed via a serial (RS-232) connection.

Availability is subject to change without notice. Kohler Co. reserves the right to change the design or specifications without notice and without any obligation or liability whatsoever. Contact your local Kohler® generator set distributor for availability.

Decision-Maker® 3000 Available Options

- ❑ **Float/Equalize Battery Charger** available with 6 or 10 amp DC volt output. The 10 amp models are available with and without NFPA alarm to signal a battery charger fault.
- ❑ **Manual Speed Adjust** available for applications using closed transition ATS.
- ❑ **Prime Power Switch** prevents battery drain during generator set non-operation periods and when the generator set battery cannot be maintained by an AC battery charger.
- ❑ **Remote Emergency Stop Switch** available as a wall mounted panel to remotely shut down the generator set.
- ❑ **Remote Monitoring Panel.** The Kohler® Remote Serial Annunciator (RSA) enables the operator to monitor the status of the generator set from a remote location, which may be required for NFPA 99 and NFPA 110 installations.
- ❑ **Run Relay** provides a relay indicating that the generator set is running.
- ❑ **Shunt Trip Wiring** provides relay outputs to trip a shunt trip circuit breaker and to signal the common fault shutdowns. Contacts rated at 10 amps at 28 VDC or 120VAC.
- ❑ **Two Input/Five Output Module** provides a generator set mounted panel with two inputs and five relay outputs.

Modbus® is a registered trademark of Schneider Electric.

Windows® is a registered trademark of Microsoft Corporation.

DISTRIBUTED BY:

© 2009, 2010, 2012, 2013, 2014 by Kohler Co., All rights reserved.

KOHLER. Power Systems

Line Circuit Breakers 15-2250 kW

ISO 9001
KOHLER POWER SYSTEMS
NATIONALLY REGISTERED

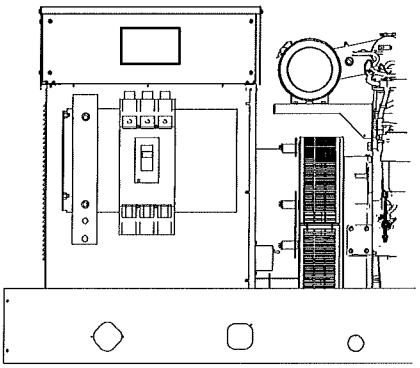

Single Circuit Breaker Kit with Neutral Bus Bar
15-300 kW Model Shown

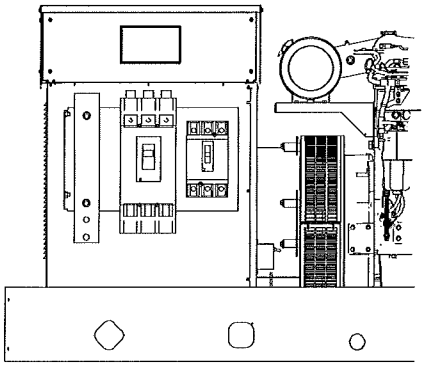

Dual Circuit Breaker Kit with Neutral Bus Bar
15-300 kW Model Shown

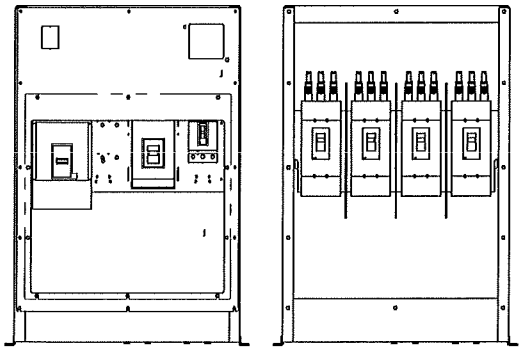

Multiple Circuit Breaker Kits with Neutral Bus Bar
350-2250 kW Model Shown
(also applies to some 300 kW models)

Standard Features

- The line circuit breaker interrupts the generator set output during a short circuit and protects the wiring when an overload occurs. Use the circuit breaker to manually disconnect the generator set from the load during generator set service.
- Circuit breaker kits are mounted to the generator set and are provided with load-side lugs and neutral bus bar.
- Kohler Co. offers a wide selection of molded-case line circuit breaker kits including single, dual, and multiple configurations for each generator set.
- Four types of line circuit breakers are available: (see page 2 for definitions and pages 3 and 4 for application details)
  - Magnetic trip
  - Thermal magnetic trip
  - Electronic trip
  - Electronic with ground fault (LSIG) trip
- In addition, line circuit breakers are offered with 80% and 100% ratings.
- Single line circuit breaker kits allow circuit protection of the entire electrical system load.
- Dual line circuit breaker kits allow circuit protection of selected priority loads from the remaining electrical system load.
- Multiple line circuit breaker kits with field connection barrier allow circuit protection for special applications (350-2250 kW).
- Line circuit breakers comply with the following codes and standards unless otherwise stated.
  - UL 489 Molded Case Circuit Breakers
  - UL 1077 Supplementary Protectors
  - UL 2200 Stationary Engine Generator Assemblies

Line Circuit Breaker Types

Magnetic Trip

The magnetic trip features an electromagnet in series with the load contacts and a moveable armature to activate the trip mechanism. When a sudden and excessive current such as a short circuit occurs, the electromagnet attracts the armature resulting in an instantaneous trip (UL 1077 circuit breakers).

Thermal Magnetic Trip

Thermal magnetic trip contains a thermal portion with a bimetallic strip that reacts to the heat produced from the load current. Excessive current causes it to bend sufficiently to trip the mechanism. The trip delay is dependant on the duration and excess of the overload current. Elements are factory-calibrated. A combination of both thermal and magnetic features allows a delayed trip on an overload and an instantaneous trip on a short circuit condition.

Electronic Trip

These line circuit breakers use electronic controls and miniature current transformers to monitor electrical currents and trip when preset limits are exceeded.

Electronic with Ground Fault Trip

The ground fault trip feature is referred to as LSIG in this document. Models with LSIG compare current flow in phase and neutral lines, and trip when current unbalance exists.

Ground fault trip units are an integral part of the circuit breaker and are not available as field-installable kits. The ground fault pickup switch sets the current level at which the circuit breaker will trip after the ground fault delay. Ground fault pickup values are based on circuit breaker sensor plug only and not on the rating plug multiplier. Changing the rating plug multiplier has no effect on the ground fault pickup values.

80% Rated Circuit Breaker

Most molded-case circuit breakers are 80% rated devices. An 80% rated circuit breaker can only be applied at 80% of its rating for continuous loads as defined by NFPA 70. Circuit conductors used with 80% rated circuit breakers are required to be rated for 100% of the circuit breaker's rating.

The 80% rated circuit breakers are typically at a lower cost than the 100% rated circuit breaker but load growth is limited.

100% Rated Circuit Breaker

Applications where all UL and NEC restrictions are met can use 100% rated circuit breakers where 100% rated circuits can carry 100% of the circuit breaker and conductor current rating.

The 100% rated circuit breakers are typically at a higher cost than the 80% rated circuit breaker but have load growth possibilities.

When applying 100% rated circuit breakers, comply with the various restrictions including UL Standard 489 and NEC Section 210. If any of the 100% rated circuit breaker restrictions are not met, the circuit breaker becomes an 80% rated circuit breaker.

Line Circuit Breaker Options

❑ Alarm Switch

The alarm switch indicates that the circuit breaker is in a tripped position caused by an overload, short circuit, ground fault, the operation of the shunt trip, an undervoltage trip, or the push-to-trip pushbutton. The alarm resets when the circuit breaker is reset.

❑ Auxiliary Contacts

These switches send a signal indicating whether the main circuit breaker contacts are in the open or closed position.

❑ Breaker Separators (350-2250 kW)

Provides adequate clearance between breaker circuits.

❑ Bus Bars

Bus bar kits offer a convenient way to connect load leads to the generator set when a circuit breaker is not present.
15-300 kW. Bus bar kits are available on alternators with leads for connection to the generator set when circuit breakers are not ordered.
350-2250 kW. A bus bar kit is provided on the right side of the unit when no circuit breaker is ordered. Bus bars are also available in combination with circuit breakers or other bus bars on the opposite side of the junction box. On medium voltage (3.3 kV and above) units, a bus bar kit is standard.

❑ Field Connection Barrier

Provides installer wiring isolation from factory connections.

❑ Ground Fault Annunciation

A relay contact for customer connection indicates a ground fault condition and is part of a ground fault alarm.

❑ Lockout Device (padlock attachment)

This field-installable handle padlock attachment is available for manually operated circuit breakers. The attachment can accommodate three padlocks and will lock the circuit breaker in the OFF position only.

❑ Neutral Lugs

Various neutral lug sizes are available to accommodate multiple cable sizes for connection to the bus bar only.

❑ Overcurrent Trip Switch

The overcurrent trip switch indicates that the circuit breaker has tripped due to overload, ground fault, or short circuit and returns to the deenergized state when the circuit breaker is reset.

❑ Shunt Trip, 12 VDC or 24 VDC

A shunt trip option provides a solenoid within the circuit breaker case that, when momentarily energized from a remote source, activates the trip mechanism. This feature allows the circuit breaker to be tripped by customer-selected faults such as alternator overload or overspeed. The circuit breaker must be reset locally after being tripped. Tripping has priority over manual or motor operator closing.

❑ Shunt Trip Wiring

Connects the shunt trip to the generator set controller.

❑ Undervoltage Trip, 12 VDC or 24 VDC

The undervoltage trips the circuit breaker when the control voltage drops below the preset threshold of 35%-70% of the rated voltage.

15-300 kW Line Circuit Breaker Specifications

80% Rating Circuit Breaker

Gen. Set kW	Alt. Model	Ampere Range	Trip Type	C. B. Frame Size
15-80	4D/4E/ 4P/4PX/ 4Q/4QX	30-100	Magnetic, UL 1077	E (480 V max.)
			Magnetic, UL 1077 with 12 V shunt trip	
			Magnetic, UL 1077 with 24 V shunt trip	
		15-150	Thermal magnetic	HD
		60-150	Electronic LI	
			Electronic LSIG	
		175-250	Thermal magnetic	JD
		250	Electronic LI	
			Electronic LSIG	
		300-400	Thermal magnetic	LA
60-200	4RX/4S/ 4SX/ 4TX/4V	30-100	Magnetic, UL 1077	E (480 V max.)
			Magnetic, UL 1077 with 12 V shunt trip	
			Magnetic, UL 1077 with 24 V shunt trip	
		15-150	Thermal magnetic	HD
		60-150	Electronic LI	
			Electronic LSIG	
		175-250	Thermal magnetic	JD
		250	Electronic LI	
			Electronic LSIG	
		300-400	Thermal magnetic	LA
		400-600	Electronic LI	LG
			Electronic LSIG	
		700-800	Thermal magnetic	MG
		1000-1200	Thermal magnetic	PG
		800-1200	Electronic LI	
			Electronic LSIG	
200-300	4UA/ 4M6226	15-150	Thermal magnetic	HD
		60-150	Electronic LI	
			Electronic LSIG	
		175-250	Thermal magnetic	JD
		250	Electronic LI	
			Electronic LSIG	
		300-400	Thermal magnetic	LA
		400-600	Electronic LI	LG
			Electronic LSIG	
		700-800	Thermal magnetic	MG
		1000-1200	Thermal magnetic	PG
		800-1200	Electronic LI	
			Electronic LSIG	

Interrupting Ratings

Circuit Breaker Frame Size	240 Volt, kA	480 Volt, kA	600 Volt, kA
HD	25	18	14
JD			
LA	42	30	22
LG	65	35	18
MG			
PG			

100% Rating Circuit Breaker

Gen. Set kW	Alt. Model	Ampere Range	Trip Type	C. B. Frame Size
15-80	4D/4E/ 4P/4PX/ 4Q/4QX	15-150	Thermal magnetic	HD
		60-150	Electronic LI	
			Electronic LSIG	
		175-250	Thermal magnetic	JD
		250	Electronic LI	
			Electronic LSIG	
		400	Electronic LI	LG
			Electronic LSIG	
60-200	4RX/4S/ 4SX/ 4TX/4V	15-150	Thermal magnetic	HD
		60-150	Electronic LI	
			Electronic LSIG	
		175-250	Thermal magnetic	JD
		250	Electronic LI	
			Electronic LSIG	
		400	Electronic LI	LG
			Electronic LSIG	
		600-1200	Electronic LI	PG
			Electronic LSIG	
200-300	4UA/ 4M6226	15-150	Thermal magnetic	HD
		60-150	Electronic LI	
			Electronic LSIG	
		175-250	Thermal magnetic	JD
		250	Electronic LI	
			Electronic LSIG	
		400	Electronic LI	LG
			Electronic LSIG	
		600-1200	Electronic LI	PG
			Electronic LSIG	

Circuit Breaker Lugs Per Phase (Al/Cu)

Frame Size	Ampere Range	Wire Range
E (480 V max.)	30-100	Up to two wire terminals fitting 10-32 or 1/4-20 stud
HD (80%)	15-150	One #14 to 3/0
HD (100%)	15-150	One #14 to 2/0 Cu only
JD (80%)	175	One 1/0 to 4/0
	200-250	One 3/0 to 350 kcmil
JD (100%)	175-250	One 3/0 to 300 kcmil Cu only
LA	300-400	One #1 to 600 kcmil or Two #1 to 250 kcmil
LG	400-600	Two 2/0 to 500 kcmil
MG	700-800	Three 3/0 to 500 kcmil
PG	600-800	Three 3/0 to 500 kcmil
	1000-1200	Four 3/0 to 500 kcmil

350-2250 kW Line Circuit Breaker Specifications

80% Rating Circuit Breaker

Gen. Set kW	Alt. Model	Ampere Range	Trip Type	C. B. Frame Size
350-2250 kW (also available on some 300 kW)	4M/ 5M/ 7M	15-150	Thermal Magnetic	HD
		60-150	Electronic LI	
		60-150	Electronic LSIG	
		175-250	Thermal Magnetic	JD
		250	Electronic LI	
			Electronic LSIG	
		60-150	Electronic LI	HG
		60-150	Electronic LSIG	
		250	Electronic LI	JG
			Electronic LSIG	
		30	9-325 A. Mag. Trip	HJ
		50	84-546 A. Mag. Trip	
		100	180-1040 A. Mag. Trip	
		150	348-1690 A. Mag. Trip	
		250	684-2500 A. Mag. Trip	JJ
		300-400	Thermal Magnetic	LA
		400	500-1000 A. Mag. Trip	
			750-1600 A. Mag. Trip	
			1000-2000 A. Mag. Trip	
			1125-2250 A. Mag. Trip	
			1250-2500 A. Mag. Trip	
			1500-3000 A. Mag. Trip	
			1750-3500 A. Mag. Trip	
			2000-4000 A. Mag. Trip	
		400-600	Electronic LI	LG
		400-600	Electronic LSIG	
		700-800	Thermal Magnetic	MG
		1000-1200	Thermal Magnetic	PG
		800-1200	Electronic LSI	
		800-1200	Electronic LSIG	
		1200	Thermal Magnetic	PJ
		1200	Electronic LSI	
		1200	Electronic LSIG	
		1600-2500	Thermal Magnetic	RJ
		1600-2500	Electronic LSI	
		1600-2500	Electronic LSIG	

Interrupting Ratings

Circuit Breaker Frame Size	240 Volt, kA	480 Volt, kA	600 Volt, kA
HD	25	18	14
HG	65	35	18
HJ	100	65	25
JD	25	18	14
JG	65	35	18
JJ	100	65	25
LA	42	30	22
LG	65	35	18
MG			
PG			
PJ	100	65	25
RJ			
NW	100	100	85

100% Rating Circuit Breaker

Gen. Set kW	Alt. Model	Ampere Range	Trip Type	C. B. Frame Size
350-2250 kW (also available on some 300 kW)	4M/ 5M/ 7M	15-150	Thermal Magnetic	HD
		60-150	Electronic LI	
		60-150	Electronic LSIG	
		175-250	Thermal Magnetic	JD
		250	Electronic LI	
			Electronic LSIG	
		60-150	Electronic LI	HG
		60-150	Electronic LSIG	
		250	Electronic LI	JG
			Electronic LSIG	
		400	Electronic LI	LG
			Electronic LSIG	
		600-1200	Electronic LSI	PG
		600-1200	Electronic LSIG	
		1200	Electronic LSI	PJ
		1200	Electronic LSIG	
		1600-2500	Electronic LSI	RJ
		1600-2500	Electronic LSIG	
		3000	Electronic LSI	NW
		3000	Electronic LSIG	

Circuit Breaker Lugs Per Phase (Al/Cu)

Frame Size	Ampere Range	Wire Range
HD (80%)	15-150	One #14 to 3/0
HD (100%)	15-150	One #14 to 2/0 Cu only
HG	60-150	One #14 to 3/0
HJ	30-150	One #14 to 3/0
JD (80%)	175	One 1/0 to 4/0
JD (80%)	200-250	One 3/0 to 350 kcmil
JD (100%)	175-250	One 3/0 to 300 kcmil Cu only
JG (80%)	250	One 3/0 to 350 kcmil
JG (100%)	250	One 3/0 to 300 kcmil Cu only
JJ	250	One 3/0 to 350 kcmil
LA	300-400	One #1 to 600 kcmil or Two #1 to 250 kcmil
LG	400-600	Two 2/0 to 500 kcmil
MG	700-800	Three 3/0 to 500 kcmil
PG	600-800	Three 3/0 to 500 kcmil
	1000-1200	Four 3/0 to 500 kcmil
PJ	1200	Four 3/0 to 500 kcmil
RJ	1600-2500	Eight 1/0 to 750 kcmil or (16) 1/0 to 300 kcmil
NW	3000	Eight 1/0 to 750 kcmil or (16) 1/0 to 300 kcmil

350-2250 kW Line Circuit Breaker Specifications

Breaker Positions

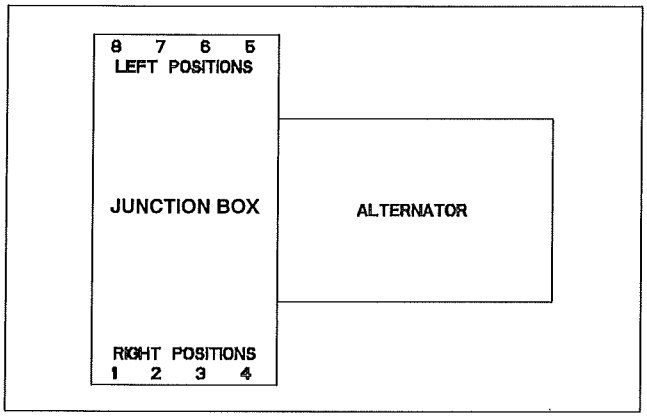

NOTE: Breaker and load bus phasing on right positions is A-B-C and on left positions is C-B-A.

NOTE: HD, HG, JD, JG, and LG-frames when selected with LSIG trip require two mounting spaces (one space for the breaker and one space for the LSIG neutral). These combinations are not reflected in the Multiple Circuit Breaker Combinations table on this page.

NOTE: H/J in the tables on this page refer to frame sizes HD, HG, HJ, JD, JG, and JJ.

Circuit Breaker Lugs Per Phase (Al/Cu)

Frame Size	Ampere Range	Wire Range
HD (80%)	15-150	One #14 to 3/0
HD (100%)	15-150	One #14 to 2/0 Cu only
HG	60-150	One #14 to 3/0
HJ	30-150	One #14 to 3/0
JD (80%)	175	One 1/0 to 4/0
JD (80%)	200-250	One 3/0 to 350 kcmil
JD (100%)	175-250	One 3/0 to 300 kcmil Cu only
JG (80%)	250	One 3/0 to 350 kcmil
JG (100%)	250	One 3/0 to 300 kcmil Cu only
JJ	250	One 3/0 to 350 kcmil
LA	300-400	One #1 to 600 kcmil or Two #1 to 250 kcmil
LG	400-600	Two 2/0 to 500 kcmil
MG	700-800	Three 3/0 to 500 kcmil
PG	600-800	Three 3/0 to 500 kcmil
	1000-1200	Four 3/0 to 500 kcmil
PJ	1200	Four 3/0 to 500 kcmil
RJ	1600-2500	Eight 1/0 to 750 kcmil or (16) 1/0 to 300 kcmil
NW	3000	Eight 1/0 to 750 kcmil or (16) 1/0 to 300 kcmil

Multiple Circuit Breaker Combinations

Alternator Model	Positions 1 or 5	2 or 6	3 or 7	4 or 8
4M/ 5M/ 7M	H/J			
	H/J	H/J		
	H/J	H/J	H/J	
	H/J	H/J	H/J	H/J
	LA			
	LA	H/J		
	LA	LA		
	LA	H/J	H/J	
	LA	LA	H/J	
	LA	LA	LA	
	LA	H/J	H/J	H/J
	LA	LA	H/J	H/J
	LA	LA	LA	H/J
	LA	LA	LA	LA
	LG			
	LG	H/J		
	LG	LA		
	LG	LG		
	LG	H/J	H/J	
	LG	LA	H/J	
	LG	LA	LA	
	LG	LG	H/J	
	LG	LG	LA	
	LG	LG	LG	
	LG	H/J	H/J	H/J
	LG	LA	H/J	H/J
	LG	LA	LA	H/J
	LG	LA	LA	LA
	LG	LG	H/J	H/J
	LG	LG	LA	H/J
	LG	LG	LA	LA
	LG	LG	LG	H/J
	LG	LG	LG	LA
	LG	LG	LG	LG †
	MG/PG/PJ			
	MG/PG/PJ		H/J	
	MG/PG/PJ		LA	
	MG/PG/PJ		LG	
	MG/PG/PJ		MG/PG/PJ ‡	
	MG/PG/PJ		H/J	H/J
	MG/PG/PJ		LA	H/J
	MG/PG/PJ		LA	LA
	MG/PG/PJ		LG	H/J
	MG/PG/PJ		LG	LA
	MG/PG/PJ		LG	LG †
	RJ			
	NW *			
	NONE OR LOAD BUS KIT			

* Frame size NW is not available with 1219 mm (48 in.) junction box.

† Frame size LG is not available in position 4 with 1219 mm (48 in.) junction box.

‡ Frame sizes MG/PG/PJ are not available in position 3 or 4 with 1219 mm (48 in.) junction box.

KOHLER CO., Kohler, Wisconsin 53044 USA
Phone 920-457-4441, Fax 920-459-1646
For the nearest sales and service outlet in the US and Canada, phone 1-800-544-2444
KOHLERPower.com

Kohler Power Systems
Asia Pacific Headquarters
7 Jurong Pier Road
Singapore 619159
Phone (65) 6264-6422, Fax (65) 6264-6455

15-300 kW Line Circuit Breaker Applications

Single Circuit Breaker Installations

A generator set with a single circuit breaker installed typically feeds a single transfer switch and then a distribution panel. This allows protection of the entire system.

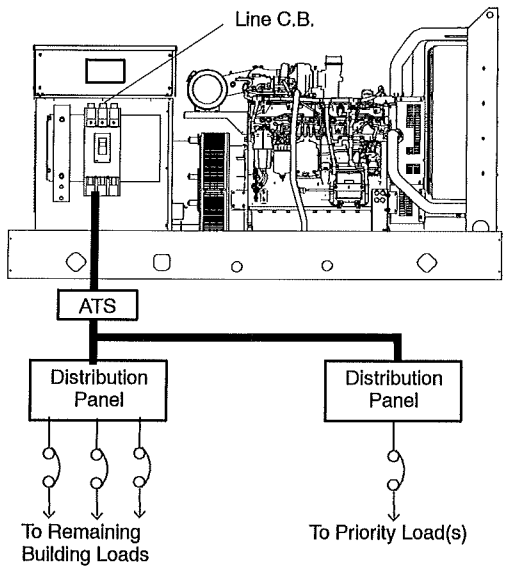

Single line circuit breaker configuration where circuit breaker can trip causing all power to building loads including priority load to be disrupted.

Dual Circuit Breaker Installations

A generator set with dual circuit breakers installed is used to separate critical loads. Typically, one circuit breaker will feed a main transfer switch with noncritical loads and the other circuit breaker will feed a second transfer switch that feeds critical or priority loads.

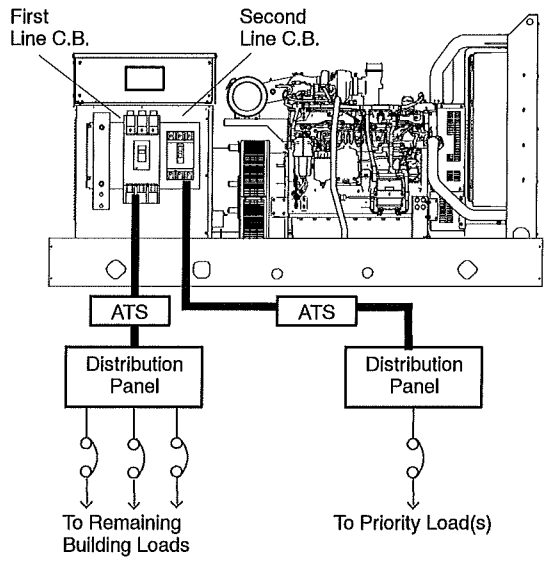

Dual line circuit breaker configuration where first circuit breaker can trip allowing second circuit breaker to continue supplying power to priority load(s).

Dual Circuit Breaker Combinations

Alternator Model	First C. B. Frame Size	Second C. B. Frame Size	Comments
All, except 4D/4E	HD	—	Standard or LSIG
	JD	—	
	LA	—	Standard only
	LG	—	Standard or LSIG
4D/4E	HD	—	Standard only
4D/4E	HD	HD	Standard only
4P/4PX/4Q/ 4QX/4RX/4S/ 4SX/4TX/4V/ 4UA	HD	HD	Standard only
	JD	HD or JD	
	LA	HD or JD	
	LG	HD or JD	
	LG	LG	
4RX/4S/ 4SX/4TX/4V	MG	—	Standard only
	PG	—	Standard or LSIG
	HD	HD	Standard only
	JD	HD or JD	
	LA	HD, JD, LA	
	LG	HD, JD, LA, or LG	
	MG		
	PG		

Alternator Model	First C. B. Frame Size	Second C. B. Frame Size	Comments
4UA/4M6226	MG	—	Standard only
	PG	—	Standard or LSIG
	HD	HD	
	JD	HD or JD	
	LA	HD, JD, or LA	Standard only
	LG	HD, JD, LA, or LG	HD, JD, LG (1 or 2 may be standard or LSIG)
	MG		PG and/or HD, JD, LG may be LSIG
	PG		
	PG	PG	Standard only

Availability is subject to change without notice. Kohler Co. reserves the right to change the design or specifications without notice and without any obligation or liability whatsoever. Contact your local Kohler® generator set distributor for availability.

DISTRIBUTED BY:

© 2007, 2010, 2011, 2012, 2013, 2014 by Kohler Co. All rights reserved.

Powerpact® H- and J-Frame 15A to 250A Molded Case Circuit Breakers

HD and HG 2-Pole

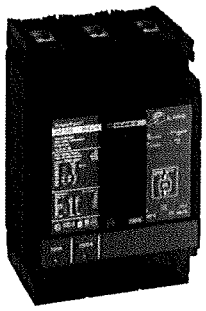

H-Frame 150A

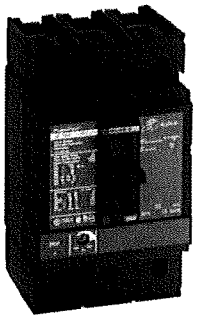

J-Frame 250A

Delivering unmatched application flexibility

Well-suited to a wide range of applications, the Powerpact H- and J-Frame Molded Case Circuit Breakers feature a full complement of field installable accessories, field installable trip units and improved interrupting ratings. These Molded Case Circuit Breakers deliver unmatched design flexibility for 15A to 250A applications and share identical mounting holes, handle locations, trim dimensions and accessories, allowing customers to standardize equipment designs for 15A to 250A applications.

Full-Featured Performance

- H-Frame – 150A available in both standard and 100% ratings with standard amperage ratings from 15 to 150A. Interrupting ratings (AIR) include D-18kA, G-35kA, J-65kA and L-100kA at 480VAC
- J-Frame – 250A available in both standard and 100% ratings with standard amperage ratings from 150A to 250A. Interrupting ratings (AIR) include D-18kA, G-35kA, J-65kA, and L-100kA at 480VAC
- Field installable accessories are common for H- and J-Frame Circuit Breakers to make stocking and installation easy
- Unique snap-in terminals make converting bus bar and lug configurations simple and easy
- Field-installable trip units lower inventory costs and reduce stocking space by configuring products at point of use
- Allows design standardization for 15A to 250A applications with common mounting holes, handle locations, and trim dimensions for both H- and J-Frame Circuit Breakers
- Many configuration options provide application flexibility, with I-Line®, plug-in, drawout, rear connected, distribution lug, crimp lug and din-rail configurations
- Motor operators, rotary handles and cable operators provide options for integrating into a variety of applications
- Certified to global standards, including UL, IEC, CSA and NOM

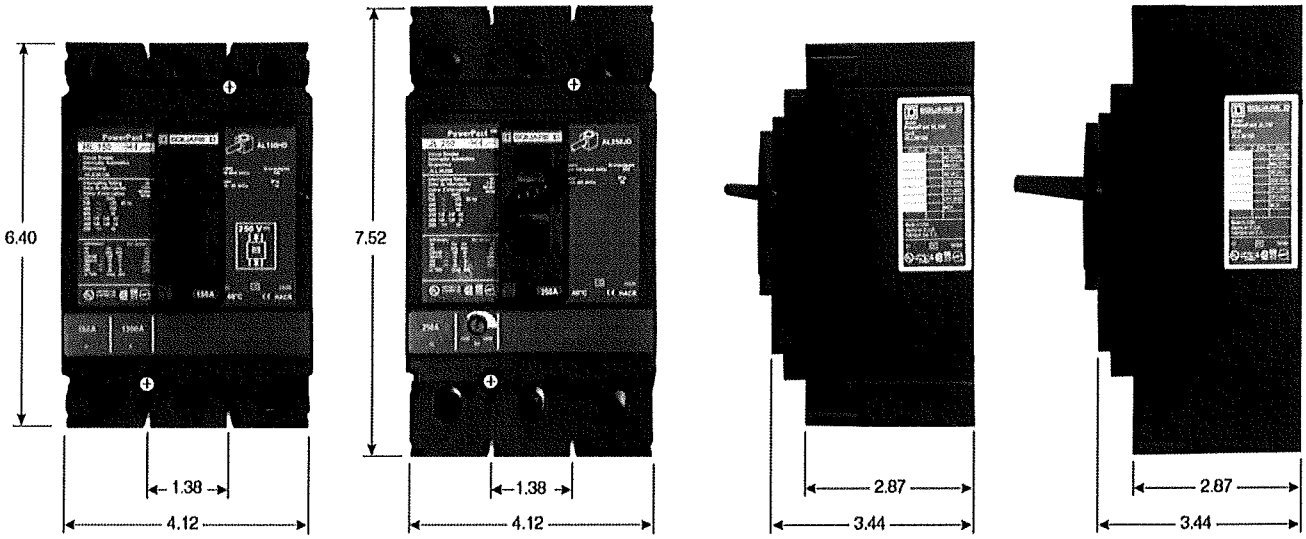

H-Frame **J-Frame** **H-Frame** **J-Frame**

Standardize Designs

Designed to help simplify the design process, the Powerpact H- and J-Frame Molded Case Circuit Breakers feature common mounting holes, handle locations and trim dimensions.

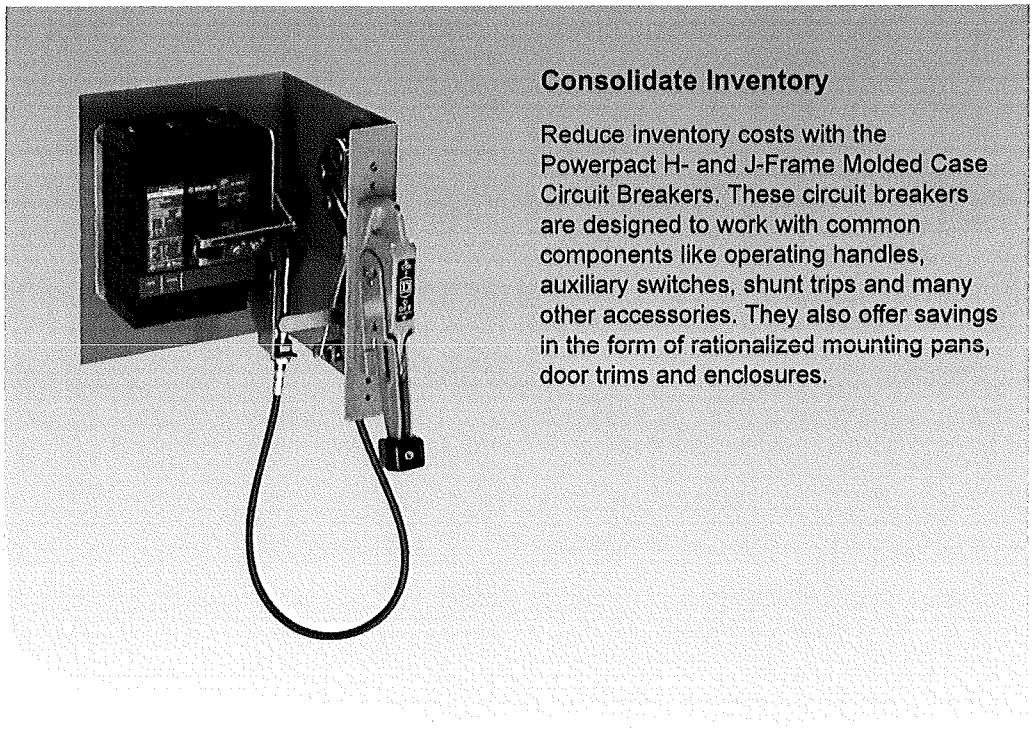

Consolidate Inventory

Reduce inventory costs with the Powerpact H- and J-Frame Molded Case Circuit Breakers. These circuit breakers are designed to work with common components like operating handles, auxiliary switches, shunt trips and many other accessories. They also offer savings in the form of rationalized mounting pans, door trims and enclosures.

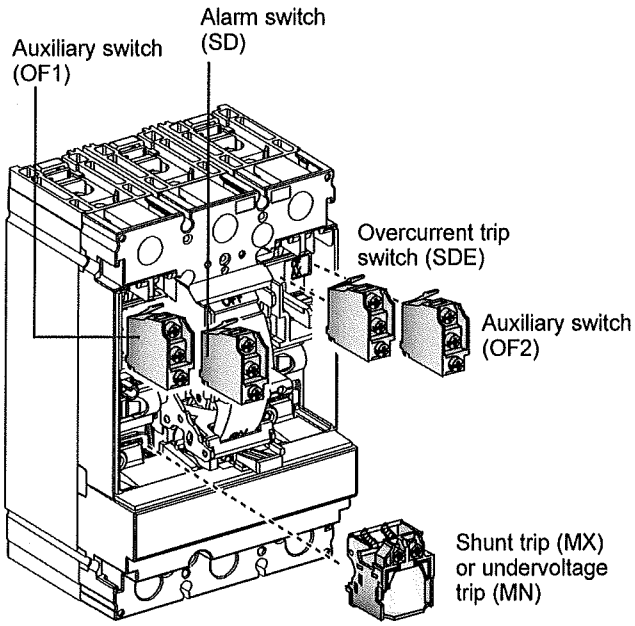

Simplify Installation

Field-installable accessories provide flexibility for late specification changes or installation at point of use. Auxiliary switches, shunt trip and undervoltage release are easy to install, reliable and common to many Powerpact Circuit Breakers.

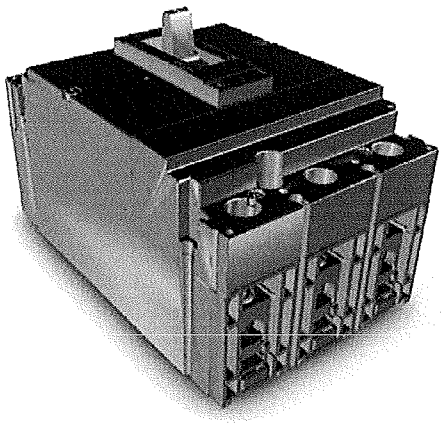

Streamline Design Integration

Comprehensive technical literature, CAD drawings and 3D models are available online to support the Powerpact H- and J-Frame Circuit Breaker line. In addition, 3D models can be downloaded in most CAD formats.

Easy to Convert

Unique snap-in lugs make converting between bus bar and lug options simple and easy. Whether the application calls for lugs on the line side, load side or both, conversions are simple, making the Powerpact H- and J-Frame Molded Case Circuit Breakers ideal for applications that require configuring products at the point of use. The terminal nut or mechanical lug is set on a plastic retainer that slides and snaps into place, without the use of tools.

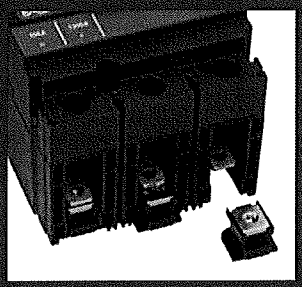

Bus Bar Option

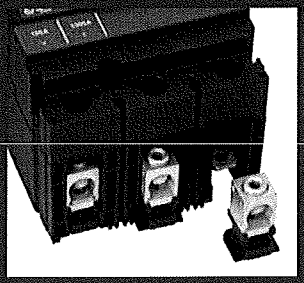

Lug Option

Powerpact® H- and J-Frame 15A to 250A Molded Case Circuit Breakers

Multiple Configurations

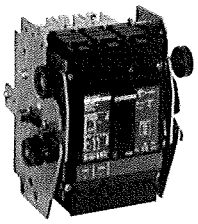

Cradle

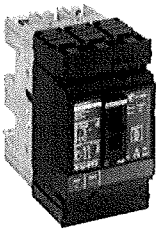

Plug-in Base

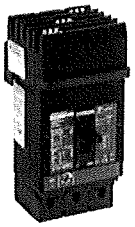

I-Line

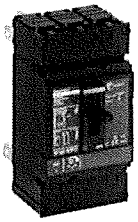

Rear Connected

Ordering Flexibility for Various Applications

- **Purchase Standard Circuit Breaker**
  Features fixed trip unit capable of reverse connection.
- **Circuit Breaker and Separate Trip Units***
  Save valuable inventory costs by configuring products at point of use. Only three frame sizes are needed to cover the entire range from 15A to 250A (shown below with H-Frame Circuit Breaker).
- **Purchase the Complete Circuit Breaker with Field-Interchangeable Trip Unit***
  Respond to last minute specification changes with the flexibility of a field interchangeable trip unit.

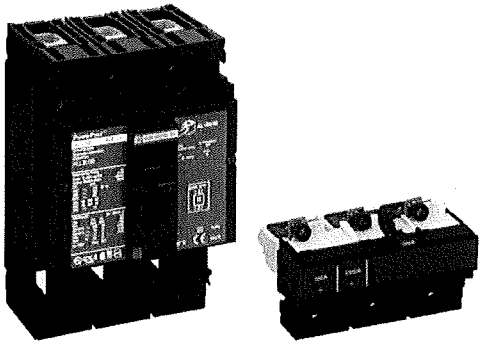

**Marked line and load and not suitable for reverse connection*

Contact your Square D sales representative for additional information. Or, visit www.us.SquareD.com.

Schneider Electric - North American Operating Division

1415 S. Roselle Road
Palatine, IL 60067
Tel: 847-397-2600
Fax: 847-925-7500

© 2004 Schneider Electric All Rights Reserved

Order Number 0611HO0401

03-04

JD, JG, JJ, JL MOLDED CASE CIRCUIT BREAKERS CHARACTERISTIC TRIP CURVE NO. 50-5

CIRCUIT BREAKER INFORMATION

Circuit Breaker Prefix	Continuous Ampere Rating	Maximum AC Voltage	Number of Poles
JD, JG, JJ, JL	150-250	600	2, 3

This curve is to be used for application and coordination purposes only. The **EZ-AMP** overlay feature at the bottom of the page should be used during coordination studies.

All time/current characteristic curve data is based on 40°C ambient cold start. Terminations are made with conductors of appropriate length and ratings.

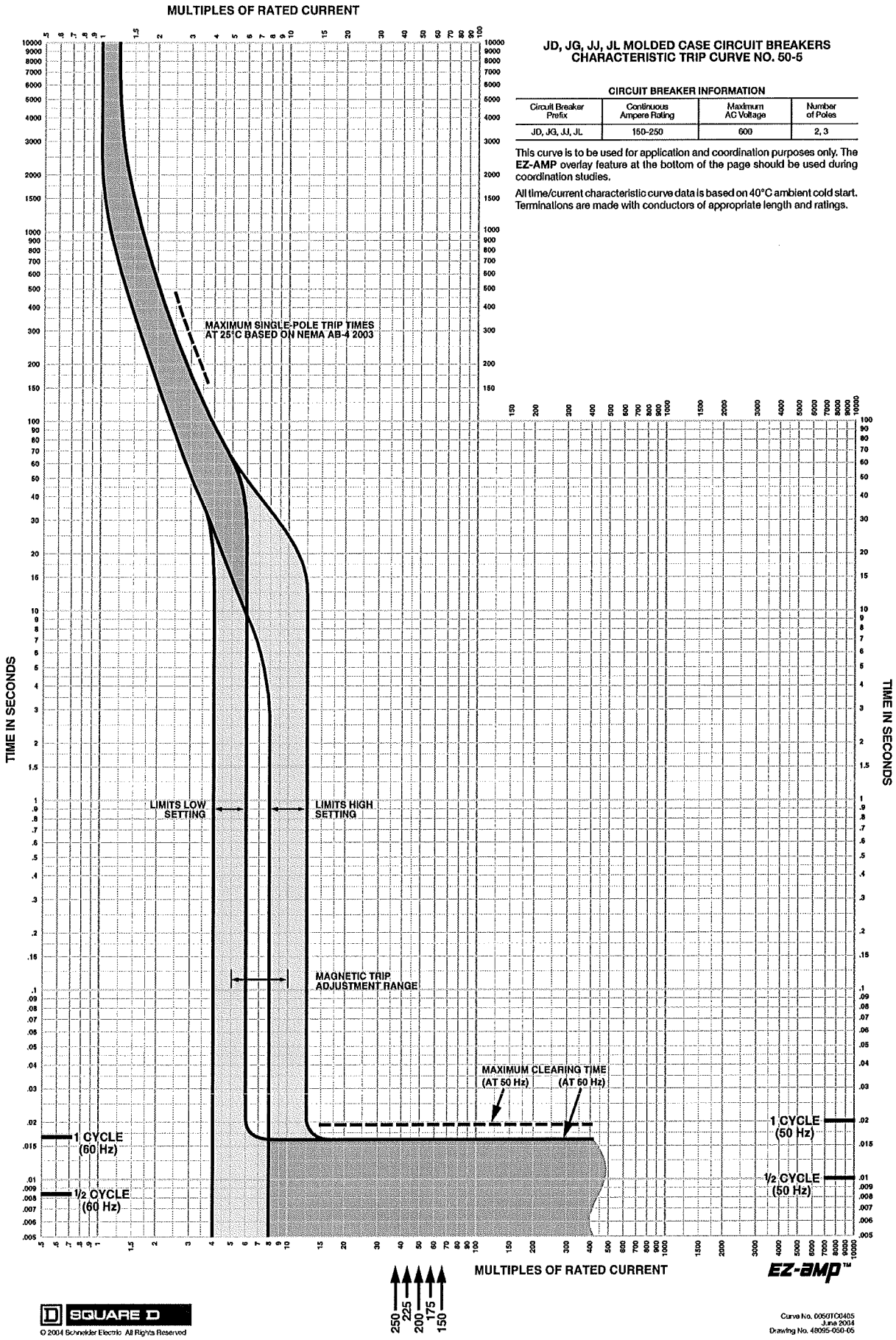

SQUARE D

© 2004 Schneider Electric All Rights Reserved

Curve No. 005GTC0405
June 2004
Drawing No. 48095-050-05

KOHLER. Power Systems

Remote Serial Annunciator III (RSA III)

ISO 9001
KOHLER POWER SYSTEMS
NATIONALLY REGISTERED

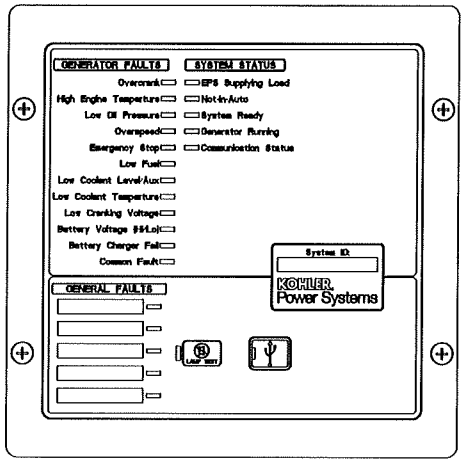

RSA III

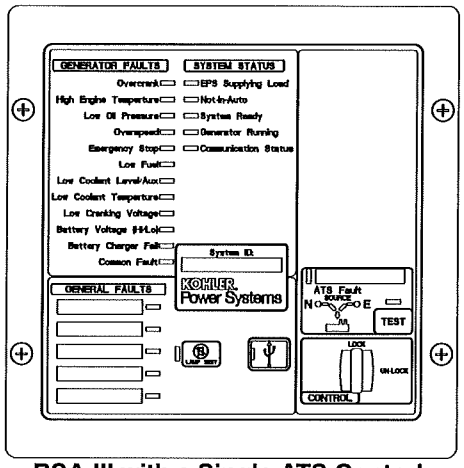

RSA III with a Single ATS Control

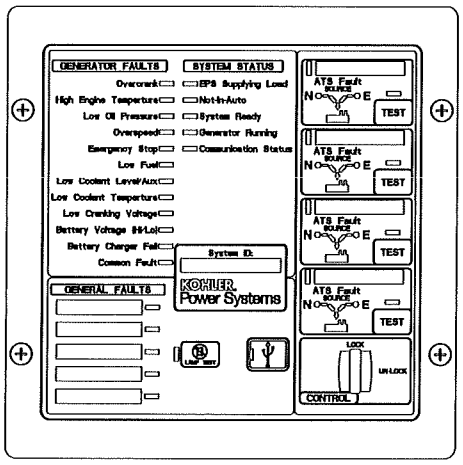

RSA III with Four ATS Controls

Remote Serial Annunciator III (RSA III) for Kohler® Controllers

- Monitors the generator set equipped with one of the following controllers:
  - KPC 1000
  - Decision-Maker® 3+
  - Decision-Maker® 550
  - Decision-Maker® 3000
  - Decision-Maker® 3500
  - Decision-Maker® 6000
- Allows monitoring of the common alarm, remote testing of the automatic transfer switch, and monitoring of the normal/emergency source for up to four ATS with any of the following controllers:
  - Decision-Maker® MPAC® 750, 1200, and 1500
  - MPAC® 1000 and 1500
- Configuration via a personal computer (PC) software.
- Writable surfaces (white boxes in illustrations) for user-defined selections.
- Uses Modbus® RTU protocol.
- Controller connections:
  - RS-485 for serial bus network
  - USB port. Connect a personal computer and use Kohler® SiteTech™ software to view events and adjust settings. *
  - 12-/24-volt DC power supply
  - 120/208 VAC power supply (available accessory)
- Meets the National Fire Protection Association Standard NFPA 110, Level 1.

Dimensions

- Dimensions—W x H x D, mm (in.).

  Surface Mounted:
  203 x 203 x 83 (8.0 x 8.0 x 3.3)

  Flush Mounted (Inside Wall):
  203 x 203 x 76 (8.0 x 8.0 x 3.0)
  Flush mounting plate W1: 254 (10.0)

* SiteTech™ software is available to Kohler authorized distributors and dealers.

Modbus® is a registered trademark of Schneider Electric.

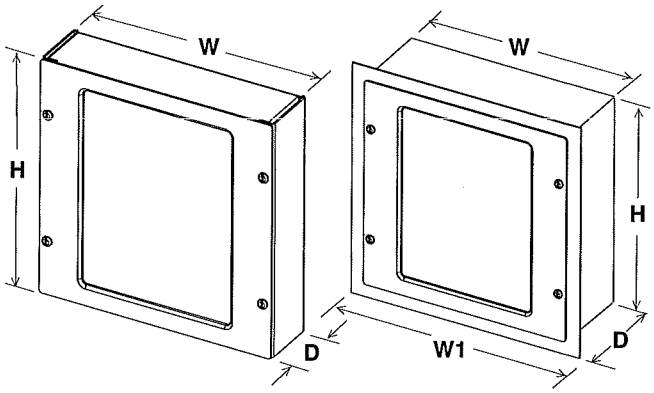

Surface Mounted Flush Mounted

Fault and Status Conditions	Fault LEDs	Fault Horn	System Ready LED	Generator Running LED	Communication Status LED
Overcrank Shutdown	Red	On	Red	Off	Green
High Engine Temperature Warning *	Yellow	On	Red	Green	Green
High Engine Temperature Shutdown	Red	On	Red	Off	Green
Low Oil Pressure Warning *	Yellow	On	Red	Green	Green
Low Oil Pressure Shutdown	Red	On	Red	Off	Green
Overspeed Shutdown	Red	On	Red	Off	Green
Emergency Stop *	Red	On	Red	Off	Green
Low Coolant Level/Aux. Shutdown	Red	On	Red	Off	Green
Low Coolant Temperature *	Yellow	On	Red	Off	Green
Low Cranking Voltage	Yellow	On	Red	Off	Green
Low Fuel—Level or Pressure *	Yellow	On	Red	Green or Off	Green
Not-In-Auto	Red	On	Red	Green or Off	Green
Common Fault	Red	On	Green	Green or Off	Green
Battery Charger Fault (1) *	Yellow	On	Red	Green or Off	Green
Battery Charger Fault (2) *	Yellow	On	Green	Green or Off	Green
High Battery Voltage *	Yellow	Off	Green	Green or Off	Green
Low Battery Voltage *	Yellow	Off	Green	Green or Off	Green
User Input #1 (Warning)	Yellow	Off	Green	Green or Off	Green
User Input #1 (Shutdown)	Red	On	Green	Off	Green
User Input #2 (Warning)	Yellow	Off	Green	Green or Off	Green
User Input #2 (Shutdown)	Red	On	Green	Off	Green
User Input #3 (Warning) (1) †	Yellow	Off	Green	Green or Off	Green
User Input #3 (Shutdown) (1) †	Red	On	Green	Off	Green
User Input #4 (Warning) (1)	Yellow	Off	Green	Green or Off	Green
User Input #4 (Shutdown) (1)	Red	On	Green	Off	Green
User Input #5 (Warning) (1)	Yellow	Off	Green	Green or Off	Green
User Input #5 (Shutdown) (1)	Red	On	Green	Off	Green
EPS Supplying Load	Yellow	Off	Green	Green	Green
Communications Status (Fault mode)	—	Off	Green or Red	Green or Off	Red
ATS Fault (RSA III with ATS Controls only)	Red	On	Red or Yellow	Green or Off	Green

Green LEDs appear as steady on when activated.
Yellow LEDs slow flash when activated except steady on with EPS supplying load and high battery voltage.
Red LEDs slow flash when activated except fast flash with loss of communication and not-in-auto.

Specifications

- LED indicating lights for status, warning, and/or shutdown.
- Power source with circuit protection: 12- or 24-volt DC
- Power source with120/208 VAC, 50/60 Hz adapter (option)
- Power draw: 200 mA
- Humidity range: 0% to 95% noncondensing
- Operating temperature range: -20°C to +70°C (-4°F to +158°F)
- Storage temperature range: -40°C to +85°C (-40°F to +185°F)
- Standards:
  - NFPA 110, level 1
  - UL 508 recognized
  - CE directive
  - NFPA 99
  - ENS 61000-4-4
  - EN6II-4-4 fast transient immunity
- RS-485 Modbus® isolated port @ 9.6/19.2/38.4/57.6 kbps (default is 19.2 kbps)
- USB device port
- NEMA 1 enclosure

(1) All generator set controllers except Decision-Maker® 3+ controller.
(2) Decision-Maker® 3+ controller only.
* May require optional kit or user-provided device to enable function and LED indication.
† Digital input #3 is factory-set for high battery voltage on the Decision-Maker® 3+ controller.
Modbus® is a registered trademark of Schneider Electric.

ATS Controls (RSA III with ATS controls only)

- ATS position LED (normal or emergency)
- Power source indicator LED (normal or emergency)
- ATS fault LED
- Key-operated lock/unlock switch for Test feature
- Test pushbutton

NFPA Requirements

- NFPA 110 compliant
- Engine functions:
  - High battery voltage warning *
  - High engine temperature shutdown
  - High engine temperature warning *
  - Low battery voltage warning *
  - Low coolant level/aux. shutdown
  - Low coolant temperature warning *
  - Low cranking voltage
  - Low fuel warning (level or pressure) *
  - Low oil pressure shutdown
  - Low oil pressure warning *
  - Overcrank shutdown
  - Overspeed shutdown
- General functions:
  - Audible alarm silence
  - Battery charger fault *
  - Lamp test
  - Master switch not-in-auto

Fault and Status LEDs and Lamp Test Switch

Alarm Horn. Horn sounds giving a minimum 90 dB at 0.1 m (0.3 ft.) audible alarm when a warning or shutdown fault condition exists except on high/low battery voltage or EPS supplying load.

Alarm Silenced. Red LED on lamp test switch lights when alarm horn is deactivated by alarm silence switch.

Alarm Silence Switch. Lamp test switch quiets the alarm during servicing. The horn will reactivate upon additional faults.

ATS Fault. Red LED lights when ATS fails to transfer.

Battery Charger Fail. LED lights if battery charger malfunctions. Requires battery charger with alarm contact.

Battery Voltage Hi/Lo. LED flashes if battery or charging voltage drops below preset level. LED lights steady if battery voltage exceeds preset level.

Common Fault. LED lights when a single or multiple common faults occur.

Communication Status. Green LED lights indicating annunciator communications functional. Red LED indicates communication fault.

EPS Supplying Load. LED lights when the Emergency Power System (EPS) generator set is supplying output current (Decision-Maker® 550, 3000, 3500, and 6000 controllers) or when transfer switch is in the emergency position (Decision-Maker® 3+ controller).

Emergency Stop. LED lights and engine stops when emergency stop is made. May require a local emergency stop switch on some Decision-Maker® 3+ controllers.

Generator Running. LED lights when generator set is in operation.

High Engine Temperature. Red LED lights if engine has shut down because of high engine coolant temperature. Yellow LED lights if engine coolant temperature approaches shutdown range. Requires warning sender on some models.

Lamp Test (Switch). Switch tests all the annunciator indicator LEDs and horn.

Low Coolant Level/Aux. LED lights when engine coolant level is below acceptable range on radiator-mounted generator sets only. When used with a Decision-Maker® 3+ controller, the LED indicates low coolant level or an auxiliary fault shutdown. Requires user-supplied low coolant level switch on remote radiator models.

Low Coolant Temperature. LED lights if optional engine block heater malfunctions and/or engine coolant temperature is too low. Requires prealarm sender on some models.

Low Cranking Voltage. LED lights if battery voltage drops below preset level during engine cranking.

Low Fuel (Level or Pressure). LED lights if fuel level in tank approaches empty with diesel models or fuel pressure is low on gas models. Requires customer-supplied switch.

Low Oil Pressure. Red LED lights if generator set shuts down because of insufficient oil pressure. Yellow LED lights if engine oil pressure approaches shutdown range. Requires warning sender on some models.

Not In Auto. LED lights when generator set master switch is in RUN or OFF/RESET position.

Overcrank. LED lights and cranking stops if engine does not start in either continuous cranking or cyclic cranking modes.

Overspeed. LED lights if generator set shuts down because of overspeed condition.

System Ready. Green LED lights when generator set master switch is in AUTO position and the system senses no faults. Red LED indicates system fault.

User-Defined Digital Inputs #1-#5. Monitors five digital auxiliary inputs (warnings or shutdowns). Individual red LEDs flash when a fault occurs or the status changes. User-defined digital inputs are selected via the RSA III master for local or remote (generator set or ATS). The user-defined digital input can be assigned at the controller or via PC using SiteTech™ setup software.

Communications (Shown with RSA III with ATS Controls)

Local Single (Master) Connection

A single RSA III connects directly to the controller's communication port with an RS-485 cable.

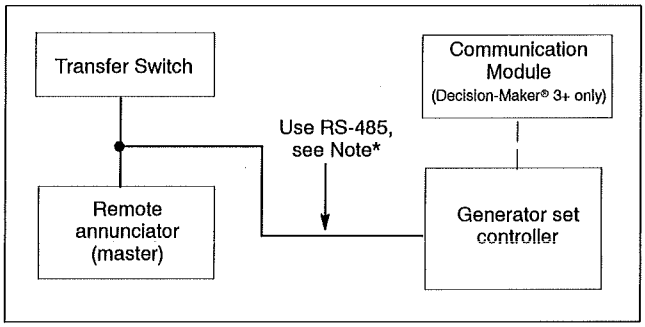

Note*: Use RS-485 for a total of up to 1220 m (4000 ft.) maximum from the first device to the last device.

Local Multiple (Master/Slave) Connections

A single RSA III master connects directly to the controller's communication port with an RS-485 cable. Additional RSA III slaves can connect to the single master RSA III. Status of the RSA III master is annunciated on the RSA III slave panel.

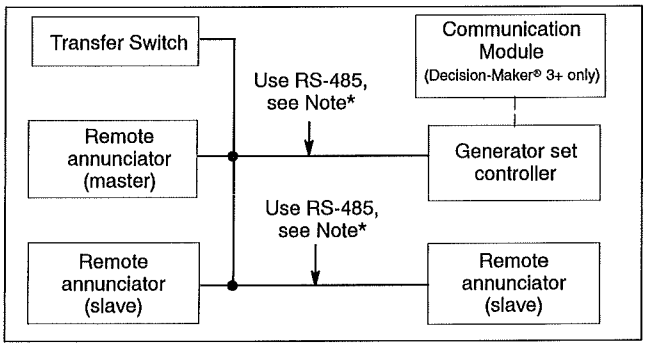

KOHLER CO., Kohler, Wisconsin 53044 USA
Phone 920-457-4441, Fax 920-459-1646
For the nearest sales and service outlet in the
US and Canada, phone 1-800-544-2444
KOHLERPower.com

Kohler Power Systems
Asia Pacific Headquarters
7 Jurong Pier Road
Singapore 619159
Phone (65) 6264-6422, Fax (65) 6264-6455

Modbus®/Ethernet, Single Master or Multiple Master/Slave Connections (Shown with RSA III with ATS Controls)

An RSA III master communicates with a controller and RSA III slaves through an Ethernet network. A Modbus®/Ethernet converter is required for each RSA III and controller. RS-485 cable connects the RSA III to the converter. Category 5e (Cat 5e) network cable connects the Modbus®/Ethernet converter to the Ethernet.

Note: Combining RSA III remote annunciators with the RSA II and RSA 1000 is permissible provided that the master remote annunciator is an RSA III remote annunciator.

Note*: Use RS-485 for a total of up to 1220 m (4000 ft.) maximum from the first device to the last device.

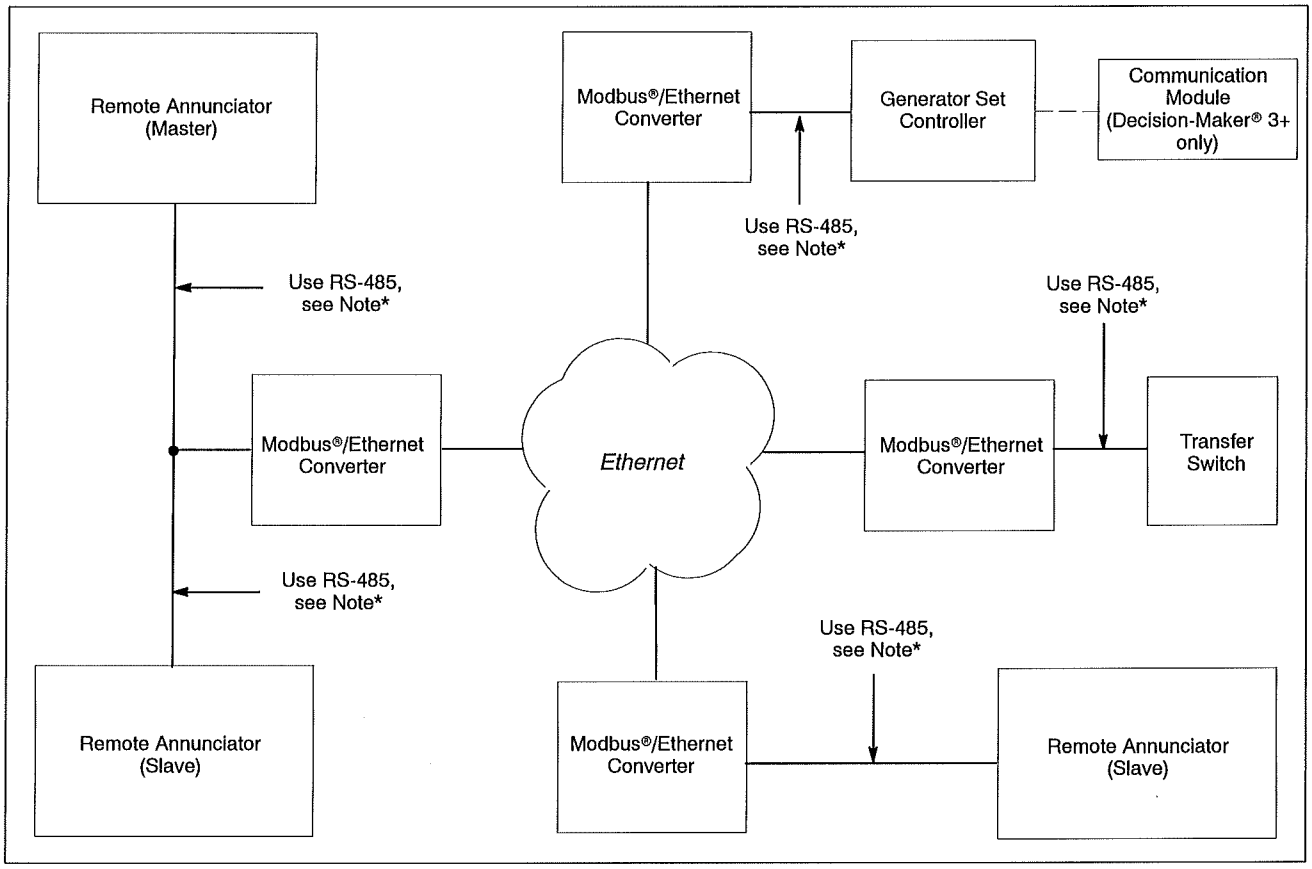

Accessories

- ❑ Power source adapter kit 120/208 VAC, 50/60 Hz.
- ❑ Modbus®/Ethernet converter GM41143-KP2 for serial to Ethernet communication.
- ❑ Communication module GM32644-KA1 or GM32644-KP1 is required with Decision-Maker® 3+ controllers.

Modbus® is a registered trademark of Schneider Electric.

DISTRIBUTED BY:

Availability is subject to change without notice. Kohler Co. reserves the right to change the design or specifications without notice and without any obligation or liability whatsoever. Contact your local Kohler® generator set distributor for availability.

© 2014 by Kohler Co. All rights reserved.

KOHLER POWER SYSTEMS

Float/Equalize Battery Charger

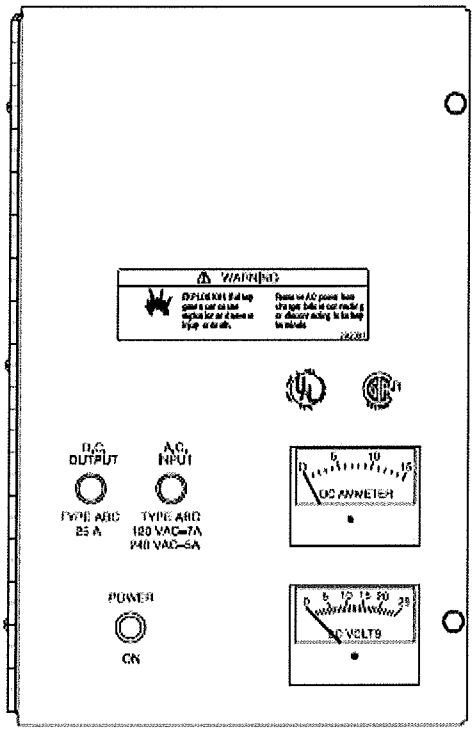

ISO 9001 KOHLER POWER SYSTEMS NATIONALLY REGISTERED

Standard Features

- Kohler automatic battery chargers feature two charging modes to keep lead-acid and nickel-cadmium batteries fully charged without overcharging. The battery charger automatic float-to-equalize operation maintains battery voltage with no manual intervention.
- Temperature compensation feature prevents overcharging or undercharging battery at high/low ambient temperatures.
- Current-limiting circuitry prevents battery charger from overload at low battery voltage and during a short circuit. The ten amp DC current limit allows the battery charger to remain connected to the battery during engine cranking.
- Battery charger complies with NFPA 110 code requirements when equipped with optional alarm circuit board. Alarm board features low battery voltage, high battery voltage, and battery charger malfunction alarm contacts.

Specifications

Installed Battery	NFPA 110 Alarm Outputs	Output		Number of Cells	
		Voltage	Amps	Lead Acid	Ni-Cd
PAD-292863	Yes	12	10	6	9

Battery Charger Kit	PAD-292863
Input Voltage	120/240 VAC
Input Frequency	120/240VAC, 50/60 Hz
DC Voltage Regulation	±1%
Dimensions (L x W x D)	271 x 143 x 422 mm (10.67 x 5.63 x 16.63 in.)
Weight	11.8 kg (26 lb.)

Float/Equalize Battery Charger, continued

Automatic Float to Equalize

When the battery loses its charge, the battery charger operates in the High Rate Constant Current Mode until the battery voltage rises to the preset equalize level.At the preset equalize level, the battery charger switches to the constant voltage Equalize Mode until the current required to maintain this voltage drops to 50% of the battery charger's high rate current.The battery charger then switches to the lower constant voltage Float Mode when the battery nears full charge. The battery charger continues to operate in this mode until AC input power disconnects or the current required to maintain the battery at the float voltage setting exceeds 6 amps.

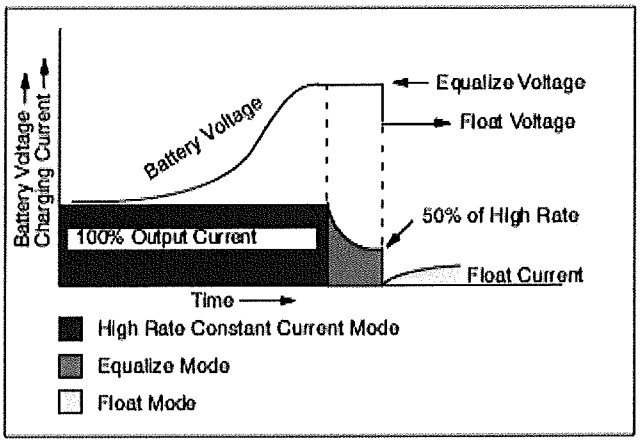

Figure 1

Temperature Compensation

The battery charger compensates for battery temperature using a negative temperature coefficient. The battery charger provides temperature compensation of -2mv/°C per cell over the ambient temperature range of -40°C up to 60°C. The temperature compensation automatically adjusts the float and equalize voltage settings to prevent the battery from overcharging at high ambient temperatures and undercharging at low ambient temperatures.

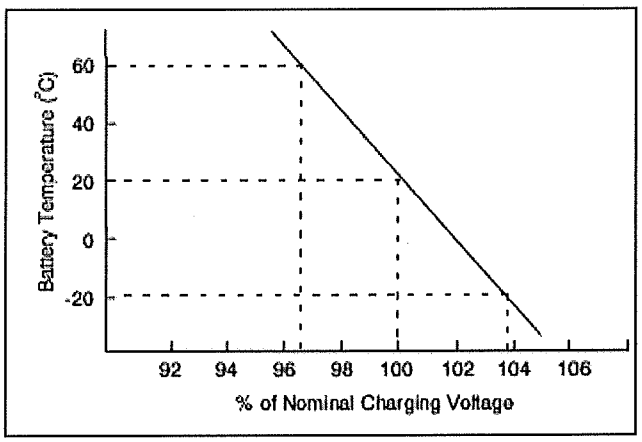

Figure 2

Standard Features

- **Ammeter and voltmeter** indicate battery charging rate with 5% full-scale accuracy. POWER ON lamp indicates battery charger is operating.
- **AC input and DC output fuses** prevent battery charger damage from abnormal overload and short-circuit conditions.
- **Operational temperature range** is from 40°C (--40°F) to 60°C (140°F). Battery charger float equalize voltage automatically adjust throughout the temperature range.
- **Reverse polarity protection circuitry** prevents battery charger from energizing if improperly connected.
- **Internal terminal blocks** for AC input and DC output/ sensing lead connections.
- **DC voltage regulation** of ±1% from no load to full load and AC input line voltage variations of ±10%.
- **UL-1012** listed/**CSA** certified.
- **Wall-mount, slotted enclosure** with knockouts for customer conduit installation.
- **Reconnection blocks** allow operation at 120 or 240 volts AC, single phase, 50 or 60 hertz.
- **Battery charger circuitry protected** from AC line and DC load voltage spikes and transients.
- **Terminal block** for remote battery sensing leads.
- **Automatic float-to-equalize operation** with individual potentiometer adjustments. Charge up to 12 lead-acid or 18 nickel-cadmium battery cells.
- **No adjustments are necessary** for lead-acid or nickel-cadmium batteries.
- **Oversized transformer and SCR heatsink** allow constant current charging at 10 amps up to the equalize voltage setting for fastest battery charging.

Note: The battery charger will discharge the engine starting battery(ies) when the battery charger is connected to the battery(ies) and is not connected to an AC power supply. To prevent engine starting battery(ies) discharge, install battery charger relay kit GM39659.

Float/Equalize Battery Charger, continued

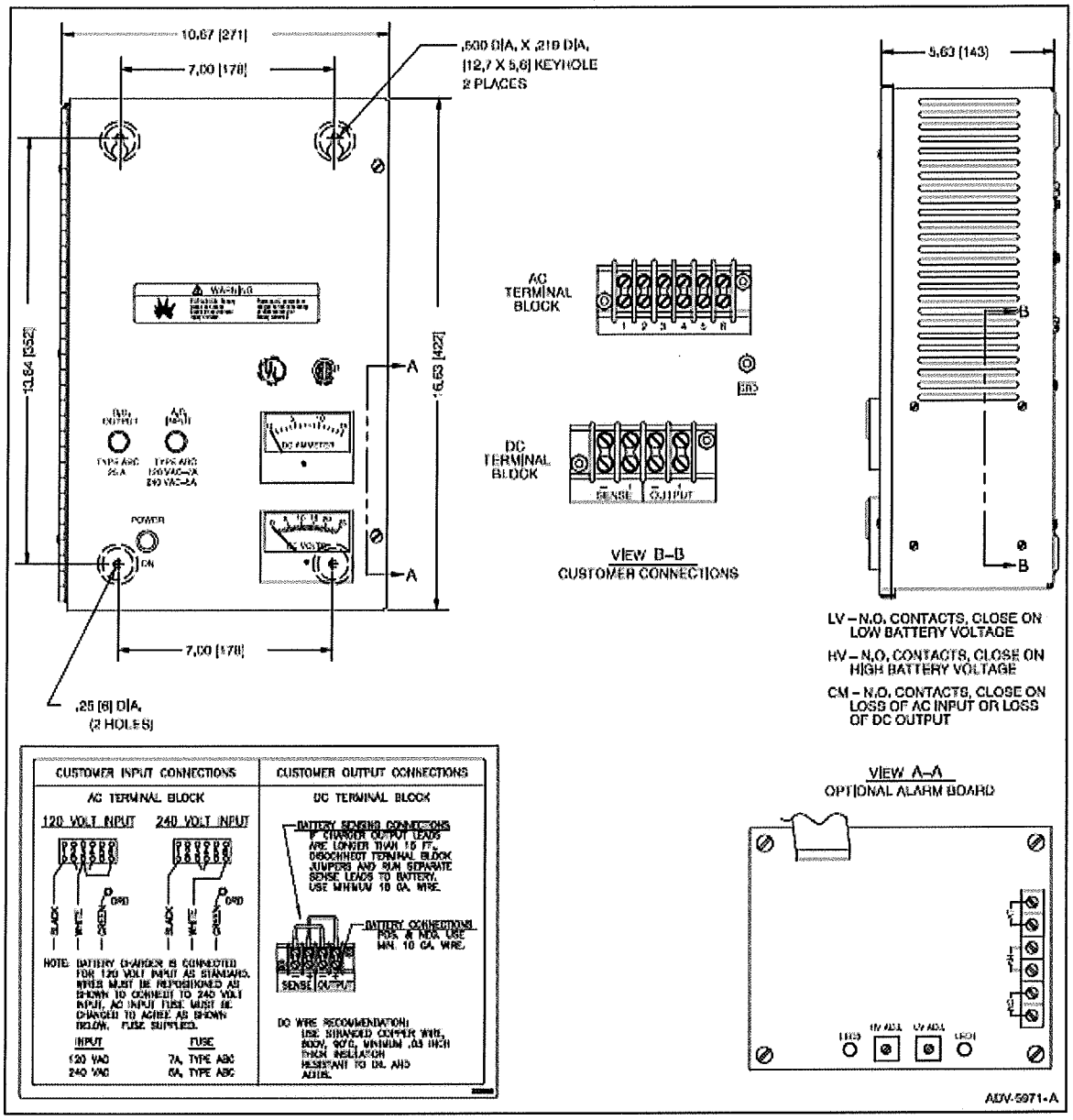

KOHLER POWER SYSTEMS

ISO 9001
KOHLER POWER SYSTEMS
NATIONALLY REGISTERED

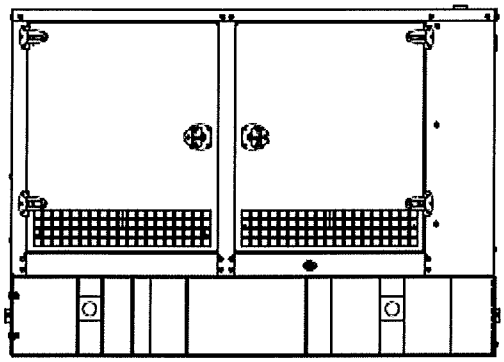

Enclosure with Standard Subbase Fuel Tank

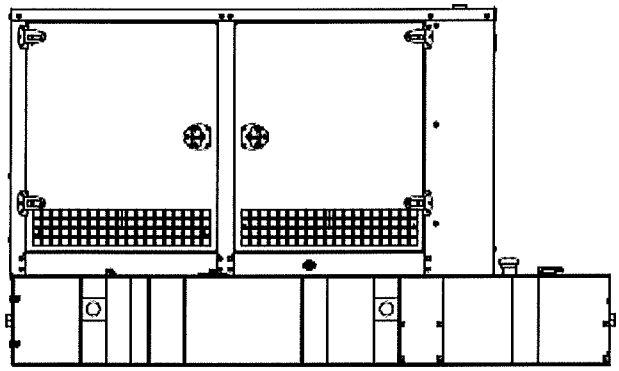

Enclosure with State Code Subbase Fuel Tank

Sound Enclosure Standard Features

- Internal-mounted critical silencer and flexible exhaust connector.
- Lift base or tank mounted, steel construction with hinged and removable doors.
- Fade-, scratch-, and corrosion-resistant Kohler® Power Armor cream beige automotive-grade textureed finish.
- Enclosure has four large access doors which allow for easy maintenance.
- Lockable, flush-mounted door latches.
- Vertical air inlet and outlet discharge to redirect air and reduce noise.
- Certified to withstand 241 kph (150 mph) wind load rating.
- Lift base or tank-mounted, steel construction with hinged doors.
- Accoustic insulation that meets UL 94 HF1 flammability classification and repels moisture absorption.
- Sound attentuated enclosure that uses up to 51 mm (2 in.) of acoustic insulation.

Subbase Fuel Tank Features

- The fuel tank has a Power Armor Plus textured epoxy-based rubberized coating.
- The above-ground rectangular secondary containment tank mounts directly to the generator set, below the generator set skid (subbase).
- Both the inner and outer tanks have emergency relief vents.
- Flexible fuel lines are provided with subbase fuel tank selection.
- The secondary containment generator set base tank meets UL 142 tank requirements. The inner (primary) tank is sealed inside the outer (secondary) tank. The outer tank contains the fuel if the inner tank leaks or ruptures.

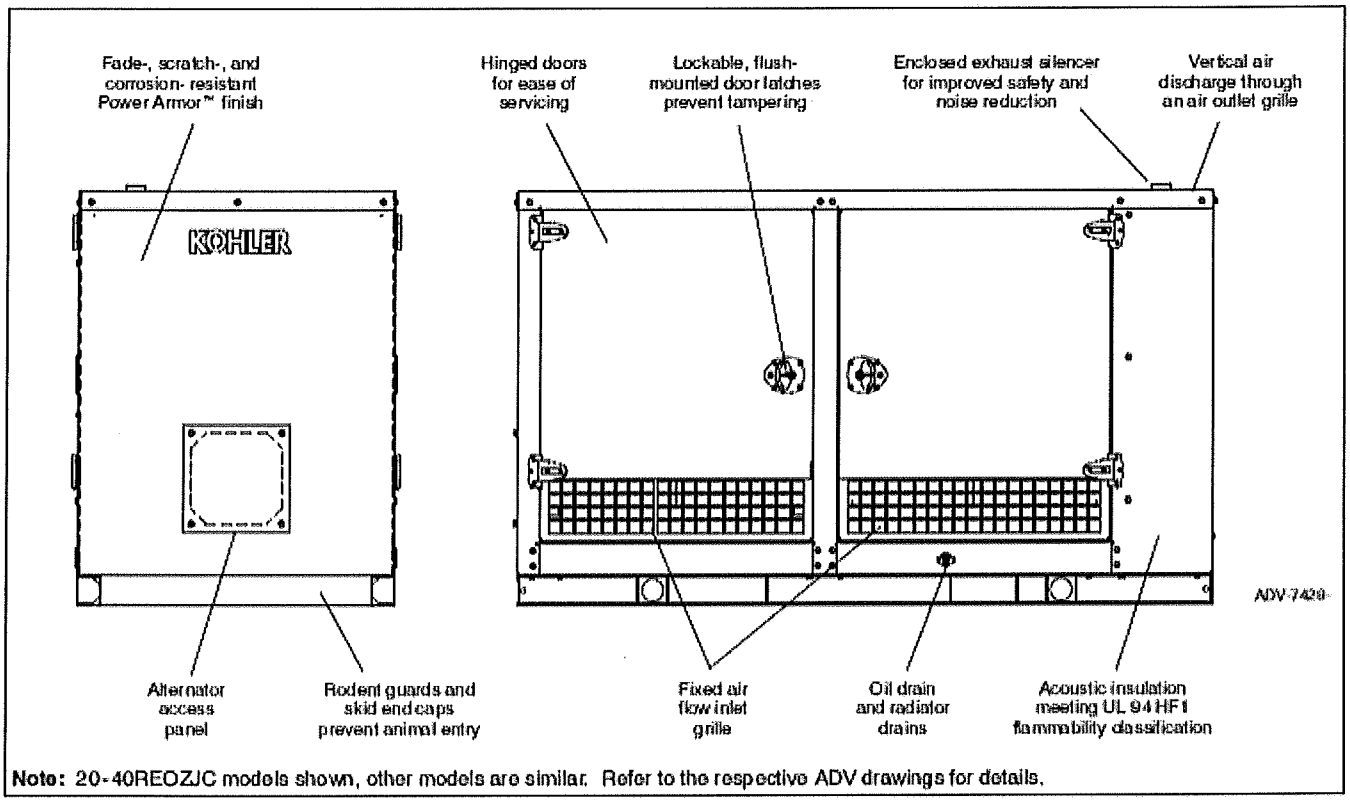

Note: 20-40REOZJC models shown, other models are similar. Refer to the respective ADV drawings for details.

Sound Enclosure Features

- Available in steel (14 gauge) formed panel, solid construction. Preassembled package offering corrosion resisitent, dent resilient structure mounting directly to lift base or fuel tank.
- Power Armor automotive-grade finish resulting in advanced corrosion and abrasion protection as well as enhanced edge coverage and color retention.
- Internal exhaust silencer offering maximum component life and operator safety.
- Interchangeable modular panel construction. Allows complete serviceability or replacement without compromising enclosure design.
- Cooling/combustion air intake with a horizontal air inlet. Sized for maximum cooling airflow.
- Service access. Multi-personnel doors for easy access to generator set control and servicing of the fuel fill, fuel gauge, oil fill and battery.
- Cooling air discharge. Weather protective design featuring vertical air discharge. Redircts cooling air up and above the enclosure to reduce ambient noise.
- Attenuated design. Acoustic insulation UL 94 HF1 listed for flame resistance offering up to 51 mm (2 in.) mechanically restrained acoustic insulation.
- Cooling air discharge. The sound enclosures include acoustic insulation with urethane film.
- Note: Installing an additional lenth of exhaust tail pipe may increase backpressure levels. Please refer to the generator set spec sheet for the maximum backpressure value.

KOHLER POWER SYSTEMS

ISO 9001 KOHLER POWER SYSTEMS NATIONALLY REGISTERED

Integral Voltage Regulator with Kohler® Decision-Maker® 3000 and Menu-Driven Selections (15-1000 kW Generator Set Models)

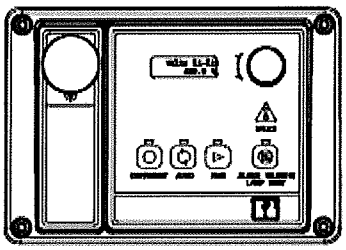

Decision-Maker® 3000 Controller with Integral Voltage Regulator

The voltage regulator is integral to the controller and uses patented hybrid voltae regulator design providing ±0.5% no-load to full-load regulation using root-mean-square (RMS) voltage sensing. The voltage regulator features three-phase sensing and is available for 12- or 24-volt engine electrical systems.

Voltage Regulators

The following information provides general features, specifications, and functions of available voltage regulators.

This information generally applies to a single generator set and multiple generator sets with paralleling applications. Refer to the respective generator set specification sheet and see your authorized distributor for information regarding specific voltage regulator applications and availability.

Integral Voltage Regulators with Decision-Maker® 3000 Controllers

Calibration	Digital Display	Range Settings	Default Selection
Voltage Adjustment	Volt Adjust	±10% of System Voltage	System Voltage
Underfrequency Unload or Frequency Setpoint	Frequency Setpoint	42 to 62 Hz	2.5 Hz Below Nominal Frequency
Underfrequency Unload Slope	Slope	0 to 10% of System Voltage (Volts per Cycle)	5% of System Voltage

Voltage Regulators, continued

Specification/Feature	Integral with Decision-Maker® 3000
Generator Set Availability	15-1000 kW
Type	Patented Hybrid Design
Status and Shutdown Indicators	LEDs and Text LCD Display
Operating Temperature	-40°C to 70°C (-40°F to 158°F)
Storage Temperature	-40°C to 85°C (-40°F to 185°F)
Humidity	5-95% Non-Condensing
Circuit Protection	Solid-State, Redundant Software and Fuses
Sensing, Nominal	100-240 Volts (L-L), 50-60 Hz
Sensing Mode	RMS, Single- or 3-Phase
Input Requirements	8-36 VDC
Continuous Output	5 VDC @ 100mA max. 5.0 ADC with GM88453 Activator Board
Maximum Output	5 VDC @ 100mA max. 7.8 ADC with GM88453 Activator Board
Transition Frequency	42.0-62.0Hz
Exciter Field Resistance	4-30 Ohms with GM88453 Activator Board
No-Load to Full-Load Voltage Regulation	±0.5%
Thermal Drift	<0.5% (-40°C to 70°C) [-40°F to 158°F] Range
Response Time	Less than 5μS
System Voltage Adjust.	±10%
Voltage Adjustment	Controller Menu Knob
Remote Voltage Adjustment	not available
Paralleling Capability	not available
VAR/PF Control Input	not available

Integral Voltage Regulator with Decision-Maker® 3000 Controller

- The Decision-Maker® 3000 digital display and pushbutton/rotary dial provide access to data. A two-line LCD display provides complete and concise information.
- The Decision-Maker® 3000 graphical display and pushbutton/rotary dial provide access to data. A five-line, 35-characters per line LCD display provides complete and concise information include gain, ramp rate, reactive droop, VAR control (P, I, D gains) and PF control (P, I, D gains).
- The controllers provide ISO 8528-5, Class G3, compliance for transient response on some 20-300 kW generator set models. Both cotrollers support Modbus®.
- These controllers can control Fast Response™ II, Fast Response™ X, and wound field alternators using the GM88453 activator board.

Voltage Regulator Menu

- Voltage adjustment, ±10% of system voltage
- V/Hz cut-in, 42-62 Hz
- Underfrequency unload slope, 0-10% of system voltage

Generator Set Calibration Menu

- L1-L2 volts
- L2-L3 volts (3-phase)
- L3-L1 volts (3-phase)
- L1-N volts
- L2-N volts
- L3-N volts (3-phase)

KOHLER POWER SYSTEMS

Spec Sheets

60REOZJD

Diesel

KOHLER POWER SYSTEMS

ISO 9001
KOHLER POWER SYSTEMS
NATIONALLY REGISTERED

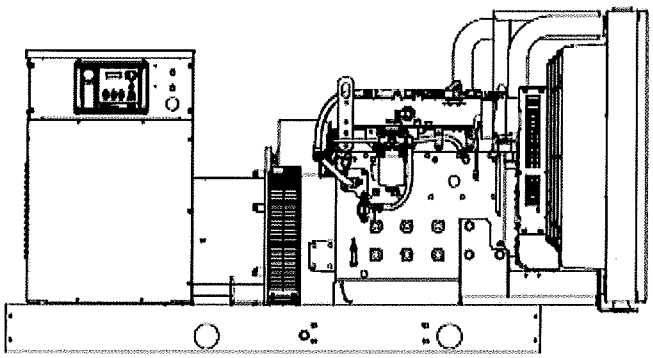

Standard Features

- Kohler Co. provides one-source responsibility for the generating system and accessories.
- The generator set and its components are prototype-tested, factory-built ,and production-tested.
- The 60 Hz generator set offers a UL 2200 listing.
- The generator set accepts rated load in one step.
- The 60 Hz generator set meets NFPA 110, Level 1, when equipped with the necessary accessories and installed per NFPA standards.
- A one-year limited warranty covers all systems and components. Two-, five-, and ten-year extended warranties are also available.
- Tier 3 EPA-certified for Stationary Emergency Applications
- Alternator Features:
  - o The unique Fast-Response X excitation system delivers excellent voltage response and short circuit capability using a rare-earth permanent magnet (PM)-excited alternator.
  - o The brushless, rotating-field alternator has broad range reconnectability.
- Other Features:
  - o Kohler designed controllers for guaranteed system integration and remote communication. See controller features inside.
  - o The low coolant level shutdown prevents overheating (standard on radiator models only).
  - o Integral vibration isolation eliminates the need for under-unit vibration spring isolators.

Generator Set Ratings

				Standby130C Ratings	
Alternator	**Voltage**	**Ph**	**Hz**	**kW/kVA**	**Amps**
4P7BX	120/240	1	60	44/44	183

RATINGS: All three-phase units are rated at 0.8 power factor. All single-phase units are rated at 1.0 power factor. Standby Ratings: The standby rating is applicable to varying loads for the duration of a power outage. There is no overload capability for this rating. Prime Power Ratings: At varying load, the number of generator set operating hours is unlimited. A 10% overload capacity is available for one hour in twelve. Ratings are in accordance with ISO-8528-1 and ISO-3046-1. For limited running time and continuous ratings, consult the factory. Obtain technical information bulletin (TIB-101) for ratings guidelines, complete ratings definitions, and site condition derates. The generator set manufacturer reserves the right to change the design or specifications without notice and without any obligation or liability whatsoever.

Model: 60REOZJD, continued

Alternator Specifications

Specifications	Alternator
Alternator manufacturer	Kohler
Type	4-Pole, Rotating-Field
Exciter type	Brushless, Rare-Earth Permanent-Magnet
Leads, quantity	4P_X: 12, Reconnectable 4, 110-120/220-240, 4Q_X: 4, 110-120/220-240
Voltage regulator	Solid State, Volts/Hz
Insulation	NEMA MG1
Insulation: Material	Class H
Insulation: Temperature Rise	130°C, Standby
Bearing: quantity, type	1, Sealed
Coupling	Flexible disc
Amortisseur windings	Full
Voltage regulation, no-load to full-load RMS	Controller Dependent
One-Step Load Acceptance	100% of rating
Unbalanced load capability	100% of Rated Standby Current

- Sustained short-circuit current of up to 300% of the rated current for up to 10 seconds.
- Sustained short-circuit current enabling down stream circuit breakers to trip without collapsing the alternator field.
- Self-ventilated and dripproof construction.
- Vacuum-impregnated windings with fungus-resistant epoxy varnish for dependability and long life.
- Superior voltage waveform from a two-thirds pitch stator and skewed rotor.
- Fast-Response™ II brushless alternator with brushless exciter for excellent load response.

Engine

Engine Specifications	
Engine Manufacturer	John Deere
Engine Model	5030HF285G
Engine: type	4-Cycle, Turbocharged
Cylinder arrangement	5 Inline
Displacement, L (cu. in.)	3.0 (186)
Bore and stroke, mm (in.)	86 x 105 (3.39 x 4.13)
Compression ratio	18.2:1
Piston speed, m/min. (ft./min.)	375 (1230)
Main bearings: quantity, type	6, Replaceable Insert
Rated rpm	1800
Max. power at rated rpm, kWm (BHP)	72 (96)
Cylinder head material	Cast Iron
Crankshaft material	Ductile Iron
Valve (exhaust) material Intake	Chromium-Silicon Steel
Valve (exhaust) material Exhaust	Stainless Steel
Governor: type, make/model	JDEC Electronic, Level 18 EUP
Frequency regulation, no-load to-full load	Isochronous
Frequency regulation, steady state	±0.25%
Frequency	Field-Convertible
Air cleaner type, all models	Dry

Model: 60REOZJD, continued

Exhaust

Exhaust System	
Exhaust Manifold Type	Dry
Exhaust flow at rated kW, m³/min. (cfm)	13.8 (488)
Exhaust temperature at rated kW, dry exhaust, °C (°F)	524 (976)
Maximum allowable back pressure, kPa (in. Hg)	7.5 (2.2)
Exh. outlet size at eng. hookup, mm (in.)	64.0 (2.5)

Engine Electrical

Engine Electrical System	
Battery charging alternator:	
Ground (negative/positive)	Negative
Volts (DC)	12
Ampere rating	70
Starter motor rated voltage (DC)	12
Battery, recommended cold cranking amps (CCA):	
Qty., CCA rating each	One, 640
Battery voltage (DC)	12

Fuel

Fuel System	
Fuel type	Diesel
Fuel supply line, min. ID, mm (in.)	11.0 (0.44)
Fuel return line, min. ID, mm (in.)	6.0 (0.25)
Max. lift, engine-driven fuel pump, m (ft.)	3.0 (10.0)
Max. fuel flow, Lph (gph)	82 (21.7)
Max. return line restriction, kPa (in. Hg)	35 (10.3)
Fuel prime pump	Manual
Fuel Filter Secondary	5 Microns @ 98% Efficiency
Fuel Filter Water Separator	Yes
Recommended fuel	#2 Diesel

Lubrication

Lubrication System	
Type	Full Pressure
Oil pan capacity, L (qt.)	10.4 (11.0)
Oil pan capacity with filter, L (qt.)	11.3 (11.9)
Oil filter: quantity, type	1, Cartridge
Oil cooler	Water-Cooled

Model: 60REOZJD, continued

Cooling

Radiator System	
Ambient temperature, °C (°F)	50 (122)
Engine jacket water capacity, L (gal.)	3.4 (0.9)
Radiator system capacity, including engine, L (gal.)	11.0 (2.9)
Engine jacket water flow, Lpm (gpm)	98 (26)
Heat rejected to cooling water at rated kW, dry exhaust, kW (Btu/min.)	45.9 (2612)
Heat rejected to air charge cooler at rated kW, dry exhaust, kW (Btu/min.)	13.0 (740)
Water pump type	Centrifugal
Fan diameter, including blades, mm (in.)	597 (23.5)
Fan, kWm (HP)	1.2 (1.6)
Max. restriction of cooling air, intake and discharge side of radiator, kPA (in. H20)	0.125 (0.5)

* Enclosure reduces ambient temperature capability by 5°C (9°F).

Operation Requirements

Air Requirements	
Radiator-cooled cooling air, m³/min. (scfm) *	96 (3400)
Combustion air, m³/min. (cfm)	5.3 (187)
Heat rejected to ambient air: Engine, kW (Btu/min.)	15.5 (880)
Heat rejected to ambient air: Alternator, kW (Btu/min.)	8.9 (505)

*Air density = 1.20 kg/m³ (0.075 lbm/ft³)

Fuel Consumption

Diesel, Lph (gph), at % load	Rating
Standby Fuel Consumption at 100% load	19.1 Lph (5.0 gph)
Standby Fuel Consumption at 75% load	14.4 Lph (3.8 gph)
Standby Fuel Consumption at 50% load	10.1 Lph (2.7 gph)
Standby Fuel Consumption at 25% load	6.0 Lph (1.6 gph)
Prime Fuel Consumption at 100% load	17.5 Lph (4.6 gph)
Prime Fuel Consumption at 75% load	13.1 Lph (3.5 gph)
Prime Fuel Consumption at 50% load	9.2 Lph (2.4 gph)
Prime Fuel Consumption at 25% load	5.8 Lph (1.5 gph)

Model: 60REOZJD, continued

Dimensions and Weights

Overall Size, L x W x H, mm (in.): Wide Skid	2300 x 1041 x 1133 (90.55 x 40.98 x 44.61)
Overall Size, L x W x H, mm (in.): Narrow Skid	1998 x 780 x 1067 (78.66 x 30.71 x 42.01)
Weight (radiator model), wet, kg (lb.):	815 (1794)

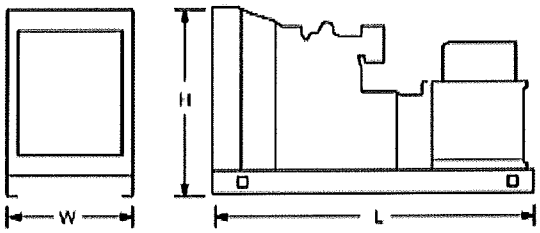

NOTE: This drawing is provided for reference only and should not be used for planning installation. Contact your local distributor for more detailed information.

KOHLER. Power Systems

Generator Set Controller

ISO 9001 KOHLER POWER SYSTEMS NATIONALLY REGISTERED

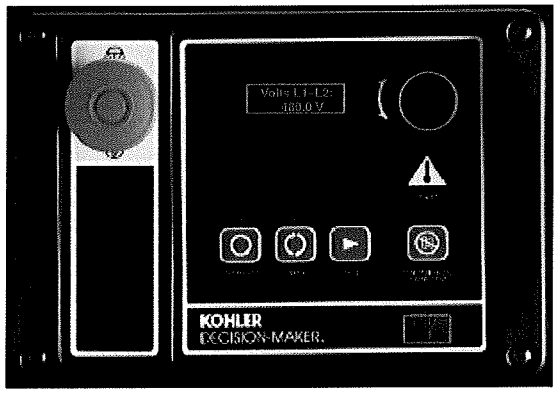

Decision-Maker® 3000

Kohler® Decision-Maker® 3000 Controller

General Description and Function

The Decision-Maker® 3000 generator set controller provides advanced control, system monitoring, and system diagnostics for optimum performance.

The Decision-Maker® 3000 controller meets NFPA 110, Level 1 when equipped with the necessary accessories and installed per NFPA standards.

The Decision-Maker® 3000 controller uses a patented hybrid voltage regulator and unique software logic to manage alternator thermal overload protection features normally requiring additional hardware. Additional features include:

- A digital display and pushbutton/rotary selector dial provide easy local access to data.
- Measurements selectable in metric or English units.
- The controller can communicate directly with a personal computer via a network or serial configuration using SiteTech™ or Monitor III software.
- The controller supports Modbus® protocol. Use with serial bus or Ethernet networks.
- Scrolling display shows critical data at a glance.
- Digital display of power metering (kW and kVA).
- Integrated hybrid voltage regulator providing ±0.5% regulation.
- Built-in alternator thermal overload protection.

Modbus® is a registered trademark of Schneider Electric.

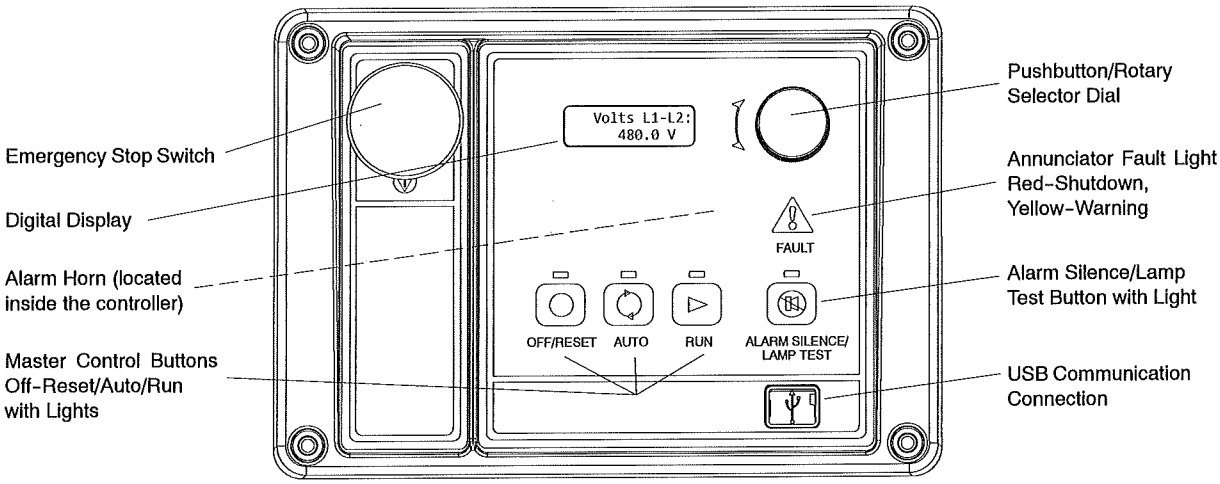

User Interface Controls and Components

- Emergency stop switch
- Backlit LCD digital display with two lines of 12 characters *(see User Interface Displays for menus)*
- Alarm horn indicates generator set shutdown and warning faults
- Environmentally sealed membrane keypad with three master control buttons with lights
  - Off/Reset (red)
  - Auto (green)
  - Run (yellow)
- Pushbutton/rotary selector dial for menu navigation
  - Rotate dial to access main menus
  - Push dial and rotate to access sub menus
  - Press dial for 3 seconds to return to top of main menu
- Annunciator fault light
  - System shutdown (red)
  - System warning (yellow)
- Alarm silence/lamp test button
  - Alarm silence
  - Lamp test
- USB and RS-485 connections
  - Allows software upgrades
  - Provides access for diagnostics
  - PC communication using SiteTech™ or Monitor III software
- Dedicated user inputs
  - Remote emergency stop switch
  - Remote 2-wire start for transfer switch
  - Auxiliary shutdown
- Integrated hybrid voltage regulator
- Auto-resettable circuit protection mounted on circuit board.
- One relay output standard. Optional five relay output available.
- One analog and three digital inputs standard. Optional two inputs available.

NFPA 110 Requirements

In order to meet NFPA 110, Level 1 requirements, the generator set controller monitors the engine/generator functions/faults shown below.

- Engine functions:
  - Overcrank
  - Low coolant temperature warning
  - High coolant temperature warning
  - High coolant temperature shutdown
  - Low oil pressure shutdown
  - Low oil pressure warning
  - High engine speed
  - Low fuel (level or pressure) *
  - Low coolant level
  - EPS supplying load
  - High battery voltage
  - Low battery voltage
- General functions:
  - Master switch not in auto
  - Battery charger fault *
  - Lamp test
  - Contacts for local and remote common alarm
  - Audible alarm silence button
  - Remote emergency stop *

* Function requires optional input sensors or kits and is engine dependent, see Controller Displays as Provided by the Engine ECM.

User Interface Displays

The listing below has • denoting main menus and ○ denoting sub-menus.

- Overview
  - Software version
  - Active shutdowns and warnings (if any are present)
  - Engine run time, total hours
  - Average voltage line-to-line
  - Frequency
  - Average current
  - Coolant temperature
  - Fuel level or pressure *
  - Oil pressure
  - Battery voltage
- Engine Metering
  - Engine speed
  - Oil pressure
  - Coolant temperature
  - Battery voltage
- Generator Metering
  - Total power, VA
  - Total power, W
  - Rated power, %
  - Voltage, L-L and L-N for all phases
  - Current, L1, L2, L3
  - Frequency
- GenSet Information
  - Generator set model number
  - Generator set serial number
  - Controller serial number
- GenSet Run Time
  - Engine run time, total hours
  - Engine loaded, hours
  - Number of engine starts
  - Total energy, kWh
- GenSet System
  - System voltage
  - System frequency, 50 or 60 Hz
  - System phase, single or three (wye or delta)
  - Power rating, kW
  - Amp rating
  - Power type, standby or prime
  - Measurement units, metric or English (user selectable)
  - Alarm silence, always or auto only (NFPA 110)
  - Manual speed adjust *
- GenSet Calibration
  - Voltage, L-L and L-N for all phases
  - Current, L1, L2, L3
  - Reset calibration
- Voltage Regulation
  - Adjust voltage, ±10%
- Digital Inputs
  - Input settings and status
- Digital Outputs
  - Output settings and status
- Analog Inputs
  - Input settings and status
- Event Log
  - Event history (stores up to 1000 system events)
- Selector Switch (requires initial activation by SiteTech™)

* Function requires optional input sensors or kits and is engine dependent, see Controller Displays as Provided by the Engine ECM.

Controller Features

- **AC Output Voltage Regulator Adjustment.** The voltage adjustment provides a maximum of ±10% of the system voltage.
- **Alarm Silence.** The controller can be set up to silence the alarm horn only when in the AUTO mode for NFPA-110 application or Always for user convenience.
- **Alternator Protection.** The controller provides generator set overload and short circuit protection matched to each alternator for the particular voltage/phase configuration.
- **Automatic Restart.** The controller automatic restart feature initiates the start routine and recrank after a failed start attempt.
- **Common Failure Relay.** This relay is integrated on the controller circuit board. Contacts are rated 2 amps at 32 VDC or 0.5 amp at 120 VAC.
- **Communication.** Controller communication is available.
- **Cyclic Cranking.** The controller has programmable cyclic cranking.
- **ECM Diagnostics.** The controller displays engine ECM fault code descriptions to help in engine troubleshooting.
- **Engine Start Aid.** The starting aid feature provides control for an optional engine starting aid.
- **Event Logging.** The controller keeps a record (up to 1000 entries) for warning and shutdown faults. This fault information becomes a stored record of system events and can be reset.
- **Historical Data Logging.** Total number of generator set successful starts is recorded and displayed.
- **Integrated Hybrid Voltage Regulator.** The voltage regulator provides ±0.5% no-load to full-load regulation with three-phase sensing.
- **Lamp Test.** Press the alarm silence/lamp test button to verify functionality of the indicator lights.
- **LCD Display.** Adjustable contrast for improving visibility.
- **Measurement Units.** The controller provides selection of English or metric displays.
- **Power Metering.** Controller digital display provides kW and kVA.
- **Programming Access (USB).** Provides software upgrades and diagnostics.
- **Remote Reset.** The remote reset function resets faults and allows restarting of the generator set without going to the master control switch off/reset position.
- **RSA II Remote Monitoring Panel.** The controller is compatible with the Kohler® Remote Serial Annunciator (RSA II).
- **Run Time Hourmeter.** The generator set run time is displayed.
- **Time Delay Engine Cooldown (TDEC).** The TDEC provides a time delay before the generator set shuts down.
- **Time Delay Engine Start (TDES).** The TDES provides a time delay before the generator set starts.
- **Voltage Selection Menu.** This menu provides the capability of quickly switching controller voltage calibrations. Requires initial activation using SiteTech™ software. **NOTE:** Generator set output leads require voltage reconnection.

Controller Functions

The following chart shows which functions cause a warning or shutdown. All functions are available as relay outputs.

Warning causes the fault light to show yellow and sounds the alarm horn signaling an impending problem.

Shutdown causes the fault light to show red, sounds the alarm horn, and stops the generator set.

	Warning Function	Shutdown Function
Engine Functions		
Critically high fuel level *	○	
ECM communication loss		●
ECM diagnostics	●	●
Engine over speed		●†
Engine start aid active		
Engine under speed		●
Fuel tank leak *	○	○
High battery voltage	●	
High coolant temperature	●	●†
High fuel level *	○	
Low battery voltage	●	
Low coolant level		●
Low coolant temperature	●	
Low cranking voltage	●	
Low engine oil level *	○	○
Low fuel level (diesel models) *	○	○
Low fuel pressure (gas models) *	○	
Low oil pressure	●	●†
No coolant temperature signal		●
No oil pressure signal		●
Overcrank		●†
Speed sensor fault	●	
General Functions		
Alarm horn silenced		
Analog inputs	○	○
Battery charger fault *	●	
Chicago code active *		
Common fault **(includes †)**		●
Common warning	●	
Digital inputs	○	○
Emergency stop		●†
Engine cooldown (delay) active		
Engine start delay active		
Engine started		
Engine stopped		
EPS supplying load		
Generator running		
Input/output communication loss	●	
Internal failure		●
Master switch not in auto	●	
NFPA 110 alarm active		
Remote start		
System ready		
Generator Functions		
AC sensing loss	●	●
Alternator protection		●
Ground fault input *	●	
kW overload		●
Locked rotor		●
Overfrequency		●
Overvoltage (each phase)		●
Underfrequency		●
Undervoltage (each phase)		●

● Standard functions
○ Available user functions
* Function requires optional input sensors or kits and is engine dependent, see Controller Displays as Provided by the Engine ECM.
† Items included with common fault shutdown

KOHLER CO., Kohler, Wisconsin 53044 USA
Phone 920-457-4441, Fax 920-459-1646
For the nearest sales and service outlet in the
US and Canada, phone 1-800-544-2444
KOHLERPower.com

Kohler Power Systems
Asia Pacific Headquarters
7 Jurong Pier Road
Singapore 619159
Phone (65) 6264-6422, Fax (65) 6264-6455

Controller Displays as Provided by the Engine ECM (availability subject to change by the engine manufacturer)						
Display	**GM/PSI**	**Doosan**	**John Deere (JDEC)**	**Volvo (EMS II)**	**Volvo (EDC III)**	**DD/MTU (ADEC)**
Ambient temperature		X				
Charge air pressure	X	X		X	X	X
Charge air temperature	X	X	X	X	X	
Coolant level				X	X	X
Coolant pressure				X	X	
Coolant temperature	X	X	X	X	X	X
Crankcase pressure				X	X	
ECM battery voltage	X	X				X
ECM fault codes	X	X	X	X	X	X
ECM serial number						X
Engine model number			X			X
Engine serial number			X			X
Engine speed	X	X	X	X	X	X
Fuel pressure				X	X	
Fuel rate	X	X	X	X	X	X
Fuel temperature			X	X	X	X
Oil level					X	
Oil pressure	X	X	X	X	X	X
Oil temperature				X	X	X
Trip fuel				X	X	X

Controller Specifications

Decision-Maker® 3000—Software Version 3.11 or higher

- Power source with circuit protection: 12- or 24-volt DC
- Power drain: 200 milliamps
- Humidity range: 5% to 95% noncondensing
- Operating temperature range: -40°C to +70°C (-40°F to +158°F)
- Storage temperature range: -40°C to +85°C (-40°F to +185°F)
- Standards:
  - CE Directive
  - NFPA 99
  - NFPA 110, Level 1
  - CSA 282-09
  - UL 508
  - ASTM B117 (salt spray test)
- Panel dimensions—W x H, 229 x 160 mm (9.0 x 6.3 in.)

Communication and PC Software Available Options

Refer to G6-76 Monitor III Software and the communication literature for additional communication and PC software information including Modbus® communication.

- ❑ **Monitor III Software for Monitoring and Control (Windows®-based user interface)**
- ❑ **Converter, Modbus®/Ethernet.** Supports a power system using controllers accessed via the Ethernet. Converter is supplied with an IP address by the site administrator. Refer to G6-79 for converter details.
- ❑ **Converter, RS-232/RS-485.** Supports a power system using controllers accessed via a serial (RS-232) connection.

Availability is subject to change without notice. Kohler Co. reserves the right to change the design or specifications without notice and without any obligation or liability whatsoever. Contact your local Kohler® generator set distributor for availability.

Decision-Maker® 3000 Available Options

- ❑ **Float/Equalize Battery Charger** available with 6 or 10 amp DC volt output. The 10 amp models are available with and without NFPA alarm to signal a battery charger fault.
- ❑ **Manual Speed Adjust** available for applications using closed transition ATS.
- ❑ **Prime Power Switch** prevents battery drain during generator set non-operation periods and when the generator set battery cannot be maintained by an AC battery charger.
- ❑ **Remote Emergency Stop Switch** available as a wall mounted panel to remotely shut down the generator set.
- ❑ **Remote Monitoring Panel.** The Kohler® Remote Serial Annunciator (RSA) enables the operator to monitor the status of the generator set from a remote location, which may be required for NFPA 99 and NFPA 110 installations.
- ❑ **Run Relay** provides a relay indicating that the generator set is running.
- ❑ **Shunt Trip Wiring** provides relay outputs to trip a shunt trip circuit breaker and to signal the common fault shutdowns. Contacts rated at 10 amps at 28 VDC or 120VAC.
- ❑ **Two Input/Five Output Module** provides a generator set mounted panel with two inputs and five relay outputs.

Modbus® is a registered trademark of Schneider Electric.

Windows® is a registered trademark of Microsoft Corporation.

DISTRIBUTED BY:

© 2009, 2010, 2012, 2013, 2014 by Kohler Co., All rights reserved.

KOHLER. Power Systems

Line Circuit Breakers 15-2250 kW

ISO 9001
KOHLER POWER SYSTEMS
NATIONALLY REGISTERED

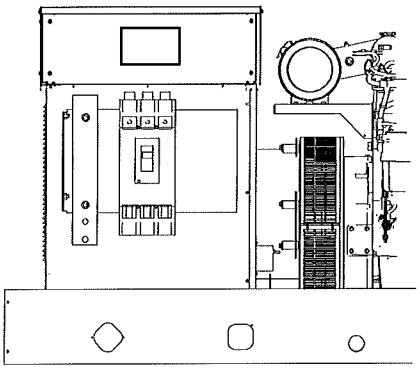

Single Circuit Breaker Kit with Neutral Bus Bar
15-300 kW Model Shown

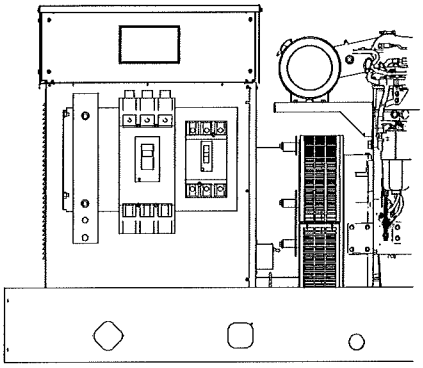

Dual Circuit Breaker Kit with Neutral Bus Bar
15-300 kW Model Shown

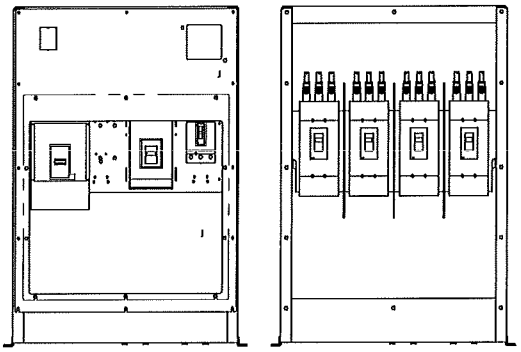

Multiple Circuit Breaker Kits with Neutral Bus Bar
350-2250 kW Model Shown
(also applies to some 300 kW models)

Standard Features

- The line circuit breaker interrupts the generator set output during a short circuit and protects the wiring when an overload occurs. Use the circuit breaker to manually disconnect the generator set from the load during generator set service.
- Circuit breaker kits are mounted to the generator set and are provided with load-side lugs and neutral bus bar.
- Kohler Co. offers a wide selection of molded-case line circuit breaker kits including single, dual, and multiple configurations for each generator set.
- Four types of line circuit breakers are available: (see page 2 for definitions and pages 3 and 4 for application details)
  - Magnetic trip
  - Thermal magnetic trip
  - Electronic trip
  - Electronic with ground fault (LSIG) trip
- In addition, line circuit breakers are offered with 80% and 100% ratings.
- Single line circuit breaker kits allow circuit protection of the entire electrical system load.
- Dual line circuit breaker kits allow circuit protection of selected priority loads from the remaining electrical system load.
- Multiple line circuit breaker kits with field connection barrier allow circuit protection for special applications (350-2250 kW).
- Line circuit breakers comply with the following codes and standards unless otherwise stated.
  - UL 489 Molded Case Circuit Breakers
  - UL 1077 Supplementary Protectors
  - UL 2200 Stationary Engine Generator Assemblies

Line Circuit Breaker Types

Magnetic Trip

The magnetic trip features an electromagnet in series with the load contacts and a moveable armature to activate the trip mechanism. When a sudden and excessive current such as a short circuit occurs, the electromagnet attracts the armature resulting in an instantaneous trip (UL 1077 circuit breakers).

Thermal Magnetic Trip

Thermal magnetic trip contains a thermal portion with a bimetallic strip that reacts to the heat produced from the load current. Excessive current causes it to bend sufficiently to trip the mechanism. The trip delay is dependant on the duration and excess of the overload current. Elements are factory-calibrated. A combination of both thermal and magnetic features allows a delayed trip on an overload and an instantaneous trip on a short circuit condition.

Electronic Trip

These line circuit breakers use electronic controls and miniature current transformers to monitor electrical currents and trip when preset limits are exceeded.

Electronic with Ground Fault Trip

The ground fault trip feature is referred to as LSIG in this document. Models with LSIG compare current flow in phase and neutral lines, and trip when current unbalance exists.

Ground fault trip units are an integral part of the circuit breaker and are not available as field-installable kits. The ground fault pickup switch sets the current level at which the circuit breaker will trip after the ground fault delay. Ground fault pickup values are based on circuit breaker sensor plug only and not on the rating plug multiplier. Changing the rating plug multiplier has no effect on the ground fault pickup values.

80% Rated Circuit Breaker

Most molded-case circuit breakers are 80% rated devices. An 80% rated circuit breaker can only be applied at 80% of its rating for continuous loads as defined by NFPA 70. Circuit conductors used with 80% rated circuit breakers are required to be rated for 100% of the circuit breaker's rating.

The 80% rated circuit breakers are typically at a lower cost than the 100% rated circuit breaker but load growth is limited.

100% Rated Circuit Breaker

Applications where all UL and NEC restrictions are met can use 100% rated circuit breakers where 100% rated circuits can carry 100% of the circuit breaker and conductor current rating.

The 100% rated circuit breakers are typically at a higher cost than the 80% rated circuit breaker but have load growth possibilities.

When applying 100% rated circuit breakers, comply with the various restrictions including UL Standard 489 and NEC Section 210. If any of the 100% rated circuit breaker restrictions are not met, the circuit breaker becomes an 80% rated circuit breaker.

Line Circuit Breaker Options

❑ Alarm Switch

The alarm switch indicates that the circuit breaker is in a tripped position caused by an overload, short circuit, ground fault, the operation of the shunt trip, an undervoltage trip, or the push-to-trip pushbutton. The alarm resets when the circuit breaker is reset.

❑ Auxiliary Contacts

These switches send a signal indicating whether the main circuit breaker contacts are in the open or closed position.

❑ Breaker Separators (350-2250 kW)

Provides adequate clearance between breaker circuits.

❑ Bus Bars

Bus bar kits offer a convenient way to connect load leads to the generator set when a circuit breaker is not present.
15-300 kW. Bus bar kits are available on alternators with leads for connection to the generator set when circuit breakers are not ordered.
350-2250 kW. A bus bar kit is provided on the right side of the unit when no circuit breaker is ordered. Bus bars are also available in combination with circuit breakers or other bus bars on the opposite side of the junction box. On medium voltage (3.3 kV and above) units, a bus bar kit is standard.

❑ Field Connection Barrier

Provides installer wiring isolation from factory connections.

❑ Ground Fault Annunciation

A relay contact for customer connection indicates a ground fault condition and is part of a ground fault alarm.

❑ Lockout Device (padlock attachment)

This field-installable handle padlock attachment is available for manually operated circuit breakers. The attachment can accommodate three padlocks and will lock the circuit breaker in the OFF position only.

❑ Neutral Lugs

Various neutral lug sizes are available to accommodate multiple cable sizes for connection to the bus bar only.

❑ Overcurrent Trip Switch

The overcurrent trip switch indicates that the circuit breaker has tripped due to overload, ground fault, or short circuit and returns to the deenergized state when the circuit breaker is reset.

❑ Shunt Trip, 12 VDC or 24 VDC

A shunt trip option provides a solenoid within the circuit breaker case that, when momentarily energized from a remote source, activates the trip mechanism. This feature allows the circuit breaker to be tripped by customer-selected faults such as alternator overload or overspeed. The circuit breaker must be reset locally after being tripped. Tripping has priority over manual or motor operator closing.

❑ Shunt Trip Wiring

Connects the shunt trip to the generator set controller.

❑ Undervoltage Trip, 12 VDC or 24 VDC

The undervoltage trips the circuit breaker when the control voltage drops below the preset threshold of 35%-70% of the rated voltage.

15-300 kW Line Circuit Breaker Specifications

80% Rating Circuit Breaker

Gen. Set kW	Alt. Model	Ampere Range	Trip Type	C. B. Frame Size
15-80	4D/4E/ 4P/4PX/ 4Q/4QX	30-100	Magnetic, UL 1077	E (480 V max.)
			Magnetic, UL 1077 with 12 V shunt trip	
			Magnetic, UL 1077 with 24 V shunt trip	
		15-150	Thermal magnetic	HD
		60-150	Electronic LI	
			Electronic LSIG	
		175-250	Thermal magnetic	JD
		250	Electronic LI	
			Electronic LSIG	
		300-400	Thermal magnetic	LA
60-200	4RX/4S/ 4SX/ 4TX/4V	30-100	Magnetic, UL 1077	E (480 V max.)
			Magnetic, UL 1077 with 12 V shunt trip	
			Magnetic, UL 1077 with 24 V shunt trip	
		15-150	Thermal magnetic	HD
		60-150	Electronic LI	
			Electronic LSIG	
		175-250	Thermal magnetic	JD
		250	Electronic LI	
			Electronic LSIG	
		300-400	Thermal magnetic	LA
		400-600	Electronic LI	LG
			Electronic LSIG	
		700-800	Thermal magnetic	MG
		1000-1200	Thermal magnetic	PG
		800-1200	Electronic LI	
			Electronic LSIG	
200-300	4UA/ 4M6226	15-150	Thermal magnetic	HD
		60-150	Electronic LI	
			Electronic LSIG	
		175-250	Thermal magnetic	JD
		250	Electronic LI	
			Electronic LSIG	
		300-400	Thermal magnetic	LA
		400-600	Electronic LI	LG
			Electronic LSIG	
		700-800	Thermal magnetic	MG
		1000-1200	Thermal magnetic	PG
		800-1200	Electronic LI	
			Electronic LSIG	

Interrupting Ratings

Circuit Breaker Frame Size	240 Volt, kA	480 Volt, kA	600 Volt, kA
HD	25	18	14
JD			
LA	42	30	22
LG	65	35	18
MG			
PG			

100% Rating Circuit Breaker

Gen. Set kW	Alt. Model	Ampere Range	Trip Type	C. B. Frame Size
15-80	4D/4E/ 4P/4PX/ 4Q/4QX	15-150	Thermal magnetic	HD
		60-150	Electronic LI	
			Electronic LSIG	
		175-250	Thermal magnetic	JD
		250	Electronic LI	
			Electronic LSIG	
		400	Electronic LI	LG
			Electronic LSIG	
60-200	4RX/4S/ 4SX/ 4TX/4V	15-150	Thermal magnetic	HD
		60-150	Electronic LI	
			Electronic LSIG	
		175-250	Thermal magnetic	JD
		250	Electronic LI	
			Electronic LSIG	
		400	Electronic LI	LG
			Electronic LSIG	
		600-1200	Electronic LI	PG
			Electronic LSIG	
200-300	4UA/ 4M6226	15-150	Thermal magnetic	HD
		60-150	Electronic LI	
			Electronic LSIG	
		175-250	Thermal magnetic	JD
		250	Electronic LI	
			Electronic LSIG	
		400	Electronic LI	LG
			Electronic LSIG	
		600-1200	Electronic LI	PG
			Electronic LSIG	

Circuit Breaker Lugs Per Phase (Al/Cu)

Frame Size	Ampere Range	Wire Range
E (480 V max.)	30-100	Up to two wire terminals fitting 10-32 or 1/4-20 stud
HD (80%)	15-150	One #14 to 3/0
HD (100%)	15-150	One #14 to 2/0 Cu only
JD (80%)	175	One 1/0 to 4/0
	200-250	One 3/0 to 350 kcmil
JD (100%)	175-250	One 3/0 to 300 kcmil Cu only
LA	300-400	One #1 to 600 kcmil or Two #1 to 250 kcmil
LG	400-600	Two 2/0 to 500 kcmil
MG	700-800	Three 3/0 to 500 kcmil
PG	600-800	Three 3/0 to 500 kcmil
	1000-1200	Four 3/0 to 500 kcmil

350-2250 kW Line Circuit Breaker Specifications

80% Rating Circuit Breaker

Gen. Set kW	Alt. Model	Ampere Range	Trip Type	C. B. Frame Size
350-2250 kW (also available on some 300 kW)	4M/ 5M/ 7M	15-150	Thermal Magnetic	HD
		60-150	Electronic LI	
		60-150	Electronic LSIG	
		175-250	Thermal Magnetic	JD
		250	Electronic LI	
			Electronic LSIG	
		60-150	Electronic LI	HG
		60-150	Electronic LSIG	
		250	Electronic LI	JG
			Electronic LSIG	
		30	9-325 A. Mag. Trip	HJ
		50	84-546 A. Mag. Trip	
		100	180-1040 A. Mag. Trip	
		150	348-1690 A. Mag. Trip	
		250	684-2500 A. Mag. Trip	JJ
		300-400	Thermal Magnetic	LA
		400	500-1000 A. Mag. Trip	
			750-1600 A. Mag. Trip	
			1000-2000 A. Mag. Trip	
			1125-2250 A. Mag. Trip	
			1250-2500 A. Mag. Trip	
			1500-3000 A. Mag. Trip	
			1750-3500 A. Mag. Trip	
			2000-4000 A. Mag. Trip	
		400-600	Electronic LI	LG
		400-600	Electronic LSIG	
		700-800	Thermal Magnetic	MG
		1000-1200	Thermal Magnetic	PG
		800-1200	Electronic LSI	
		800-1200	Electronic LSIG	
		1200	Thermal Magnetic	PJ
		1200	Electronic LSI	
		1200	Electronic LSIG	
		1600-2500	Thermal Magnetic	RJ
		1600-2500	Electronic LSI	
		1600-2500	Electronic LSIG	

Interrupting Ratings

Circuit Breaker Frame Size	240 Volt, kA	480 Volt, kA	600 Volt, kA
HD	25	18	14
HG	65	35	18
HJ	100	65	25
JD	25	18	14
JG	65	35	18
JJ	100	65	25
LA	42	30	22
LG	65	35	18
MG			
PG			
PJ	100	65	25
RJ			
NW	100	100	85

100% Rating Circuit Breaker

Gen. Set kW	Alt. Model	Ampere Range	Trip Type	C. B. Frame Size
350-2250 kW (also available on some 300 kW)	4M/ 5M/ 7M	15-150	Thermal Magnetic	HD
		60-150	Electronic LI	
		60-150	Electronic LSIG	
		175-250	Thermal Magnetic	JD
		250	Electronic LI	
			Electronic LSIG	
		60-150	Electronic LI	HG
		60-150	Electronic LSIG	
		250	Electronic LI	JG
			Electronic LSIG	
		400	Electronic LI	LG
			Electronic LSIG	
		600-1200	Electronic LSI	PG
		600-1200	Electronic LSIG	
		1200	Electronic LSI	PJ
		1200	Electronic LSIG	
		1600-2500	Electronic LSI	RJ
		1600-2500	Electronic LSIG	
		3000	Electronic LSI	NW
		3000	Electronic LSIG	

Circuit Breaker Lugs Per Phase (Al/Cu)

Frame Size	Ampere Range	Wire Range
HD (80%)	15-150	One #14 to 3/0
HD (100%)	15-150	One #14 to 2/0 Cu only
HG	60-150	One #14 to 3/0
HJ	30-150	One #14 to 3/0
JD (80%)	175	One 1/0 to 4/0
JD (80%)	200-250	One 3/0 to 350 kcmil
JD (100%)	175-250	One 3/0 to 300 kcmil Cu only
JG (80%)	250	One 3/0 to 350 kcmil
JG (100%)	250	One 3/0 to 300 kcmil Cu only
JJ	250	One 3/0 to 350 kcmil
LA	300-400	One #1 to 600 kcmil or Two #1 to 250 kcmil
LG	400-600	Two 2/0 to 500 kcmil
MG	700-800	Three 3/0 to 500 kcmil
PG	600-800	Three 3/0 to 500 kcmil
	1000-1200	Four 3/0 to 500 kcmil
PJ	1200	Four 3/0 to 500 kcmil
RJ	1600-2500	Eight 1/0 to 750 kcmil or (16) 1/0 to 300 kcmil
NW	3000	Eight 1/0 to 750 kcmil or (16) 1/0 to 300 kcmil

350-2250 kW Line Circuit Breaker Specifications

Breaker Positions

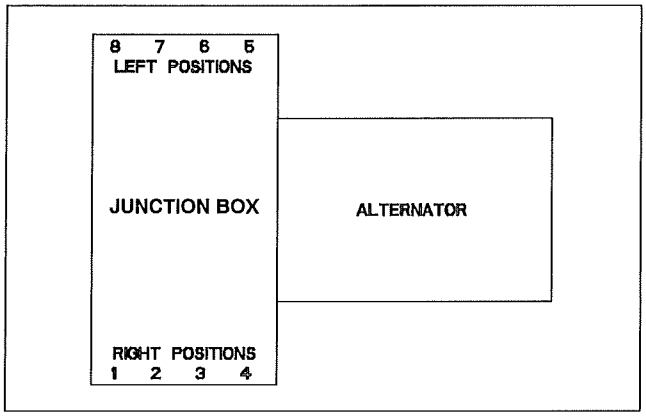

NOTE: Breaker and load bus phasing on right positions is A-B-C and on left positions is C-B-A.

NOTE: HD, HG, JD, JG, and LG-frames when selected with LSIG trip require two mounting spaces (one space for the breaker and one space for the LSIG neutral). These combinations are not reflected in the Multiple Circuit Breaker Combinations table on this page.

NOTE: H/J in the tables on this page refer to frame sizes HD, HG, HJ, JD, JG, and JJ.

Circuit Breaker Lugs Per Phase (Al/Cu)

Frame Size	Ampere Range	Wire Range
HD (80%)	15-150	One #14 to 3/0
HD (100%)	15-150	One #14 to 2/0 Cu only
HG	60-150	One #14 to 3/0
HJ	30-150	One #14 to 3/0
JD (80%)	175	One 1/0 to 4/0
JD (80%)	200-250	One 3/0 to 350 kcmil
JD (100%)	175-250	One 3/0 to 300 kcmil Cu only
JG (80%)	250	One 3/0 to 350 kcmil
JG (100%)	250	One 3/0 to 300 kcmil Cu only
JJ	250	One 3/0 to 350 kcmil
LA	300-400	One #1 to 600 kcmil or Two #1 to 250 kcmil
LG	400-600	Two 2/0 to 500 kcmil
MG	700-800	Three 3/0 to 500 kcmil
PG	600-800	Three 3/0 to 500 kcmil
	1000-1200	Four 3/0 to 500 kcmil
PJ	1200	Four 3/0 to 500 kcmil
RJ	1600-2500	Eight 1/0 to 750 kcmil or (16) 1/0 to 300 kcmil
NW	3000	Eight 1/0 to 750 kcmil or (16) 1/0 to 300 kcmil

Multiple Circuit Breaker Combinations

Alternator Model	Positions 1 or 5	2 or 6	3 or 7	4 or 8
4M/ 5M/ 7M	H/J			
	H/J	H/J		
	H/J	H/J	H/J	
	H/J	H/J	H/J	H/J
	LA			
	LA	H/J		
	LA	LA		
	LA	H/J	H/J	
	LA	LA	H/J	
	LA	LA	LA	
	LA	H/J	H/J	H/J
	LA	LA	H/J	H/J
	LA	LA	LA	H/J
	LA	LA	LA	LA
	LG			
	LG	H/J		
	LG	LA		
	LG	LG		
	LG	H/J	H/J	
	LG	LA	H/J	
	LG	LA	LA	
	LG	LG	H/J	
	LG	LG	LA	
	LG	LG	LG	
	LG	H/J	H/J	H/J
	LG	LA	H/J	H/J
	LG	LA	LA	H/J
	LG	LA	LA	LA
	LG	LG	H/J	H/J
	LG	LG	LA	H/J
	LG	LG	LA	LA
	LG	LG	LG	H/J
	LG	LG	LG	LA
	LG	LG	LG	LG †
	MG/PG/PJ			
	MG/PG/PJ		H/J	
	MG/PG/PJ		LA	
	MG/PG/PJ		LG	
	MG/PG/PJ		MG/PG/PJ ‡	
	MG/PG/PJ		H/J	H/J
	MG/PG/PJ		LA	H/J
	MG/PG/PJ		LA	LA
	MG/PG/PJ		LG	H/J
	MG/PG/PJ		LG	LA
	MG/PG/PJ		LG	LG †
	RJ			
	NW *			
	NONE OR LOAD BUS KIT			

* Frame size NW is not available with 1219 mm (48 in.) junction box.

† Frame size LG is not available in position 4 with 1219 mm (48 in.) junction box.

‡ Frame sizes MG/PG/PJ are not available in position 3 or 4 with 1219 mm (48 in.) junction box.

KOHLER CO., Kohler, Wisconsin 53044 USA
Phone 920-457-4441, Fax 920-459-1646
For the nearest sales and service outlet in the
US and Canada, phone 1-800-544-2444
KOHLERPower.com

Kohler Power Systems
Asia Pacific Headquarters
7 Jurong Pier Road
Singapore 619159
Phone (65) 6264-6422, Fax (65) 6264-6455

15-300 kW Line Circuit Breaker Applications

Single Circuit Breaker Installations

A generator set with a single circuit breaker installed typically feeds a single transfer switch and then a distribution panel. This allows protection of the entire system.

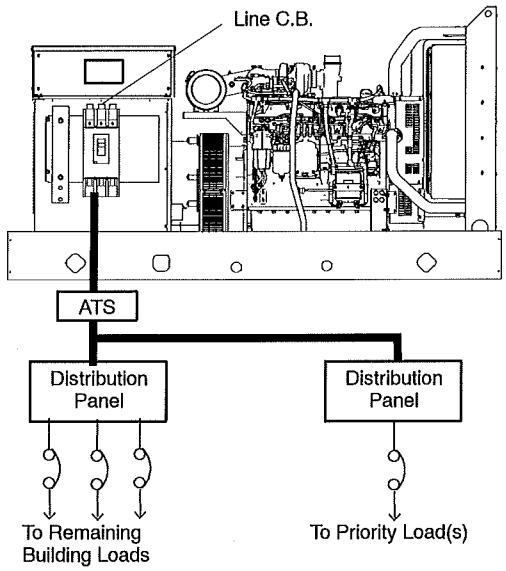

Single line circuit breaker configuration where circuit breaker can trip causing all power to building loads including priority load to be disrupted.

Dual Circuit Breaker Installations

A generator set with dual circuit breakers installed is used to separate critical loads. Typically, one circuit breaker will feed a main transfer switch with noncritical loads and the other circuit breaker will feed a second transfer switch that feeds critical or priority loads.

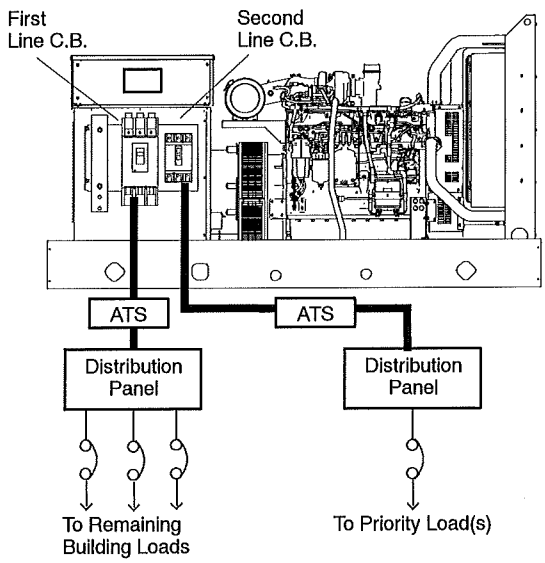

Dual line circuit breaker configuration where first circuit breaker can trip allowing second circuit breaker to continue supplying power to priority load(s).

Dual Circuit Breaker Combinations

Alternator Model	First C. B. Frame Size	Second C. B. Frame Size	Comments
All, except 4D/4E	HD	—	Standard or LSIG
	JD	—	
	LA	—	Standard only
	LG	—	Standard or LSIG
4D/4E	HD	—	Standard only
4D/4E	HD	HD	Standard only
4P/4PX/4Q/ 4QX/4RX/4S/ 4SX/4TX/4V/ 4UA	HD	HD	Standard only
	JD	HD or JD	
	LA	HD or JD	
	LG	HD or JD	
	LG	LG	
4RX/4S/ 4SX/4TX/4V	MG	—	Standard only
	PG	—	Standard or LSIG
	HD	HD	Standard only
	JD	HD or JD	
	LA	HD, JD, LA	
	LG	HD, JD, LA, or LG	
	MG		
	PG		

Alternator Model	First C. B. Frame Size	Second C. B. Frame Size	Comments
4UA/4M6226	MG	—	Standard only
	PG	—	Standard or LSIG
	HD	HD	
	JD	HD or JD	
	LA	HD, JD, or LA	Standard only
	LG	HD, JD, LA, or LG	HD, JD, LG (1 or 2 may be standard or LSIG)
	MG		PG and/or HD, JD, LG may be LSIG
	PG		
	PG	PG	Standard only

Availability is subject to change without notice. Kohler Co. reserves the right to change the design or specifications without notice and without any obligation or liability whatsoever. Contact your local Kohler® generator set distributor for availability.

DISTRIBUTED BY:

© 2007, 2010, 2011, 2012, 2013, 2014 by Kohler Co. All rights reserved.

Powerpact® H- and J-Frame 15A to 250A Molded Case Circuit Breakers

HD and HG 2-Pole

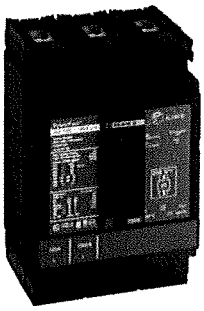

H-Frame 150A

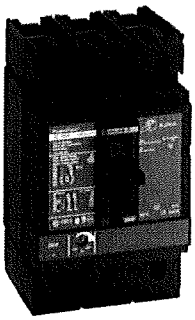

J-Frame 250A

Delivering unmatched application flexibility

Well-suited to a wide range of applications, the Powerpact H- and J-Frame Molded Case Circuit Breakers feature a full complement of field installable accessories, field installable trip units and improved interrupting ratings. These Molded Case Circuit Breakers deliver unmatched design flexibility for 15A to 250A applications and share identical mounting holes, handle locations, trim dimensions and accessories, allowing customers to standardize equipment designs for 15A to 250A applications.

Full-Featured Performance

- H-Frame – 150A available in both standard and 100% ratings with standard amperage ratings from 15 to 150A. Interrupting ratings (AIR) include D-18kA, G-35kA, J-65kA and L-100kA at 480VAC
- J-Frame – 250A available in both standard and 100% ratings with standard amperage ratings from 150A to 250A. Interrupting ratings (AIR) include D-18kA, G-35kA, J-65kA, and L-100kA at 480VAC
- Field installable accessories are common for H- and J-Frame Circuit Breakers to make stocking and installation easy
- Unique snap-in terminals make converting bus bar and lug configurations simple and easy
- Field-installable trip units lower inventory costs and reduce stocking space by configuring products at point of use
- Allows design standardization for 15A to 250A applications with common mounting holes, handle locations, and trim dimensions for both H- and J-Frame Circuit Breakers
- Many configuration options provide application flexibility, with I-Line®, plug-in, drawout, rear connected, distribution lug, crimp lug and din-rail configurations
- Motor operators, rotary handles and cable operators provide options for integrating into a variety of applications
- Certified to global standards, including UL, IEC, CSA and NOM

a brand of Schneider Electric

SQUARE D

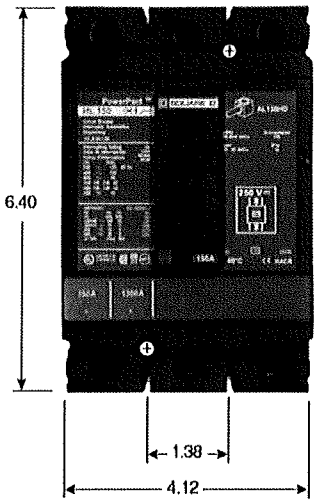

H-Frame

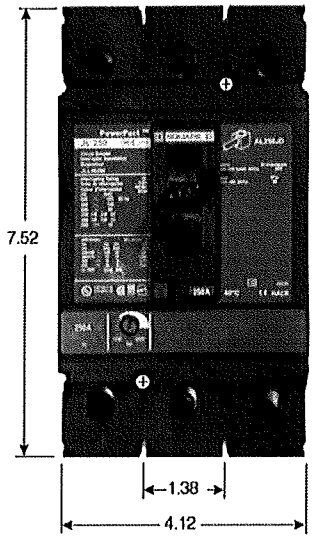

J-Frame

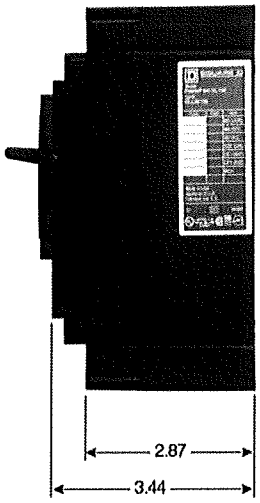

H-Frame

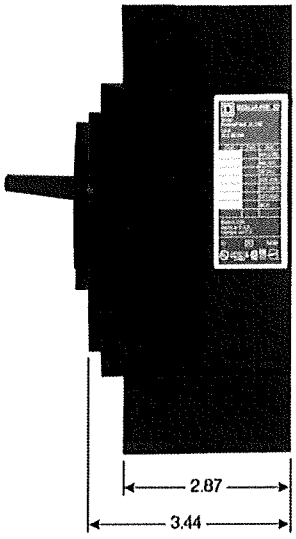

J-Frame

Standardize Designs

Designed to help simplify the design process, the Powerpact H- and J-Frame Molded Case Circuit Breakers feature common mounting holes, handle locations and trim dimensions.

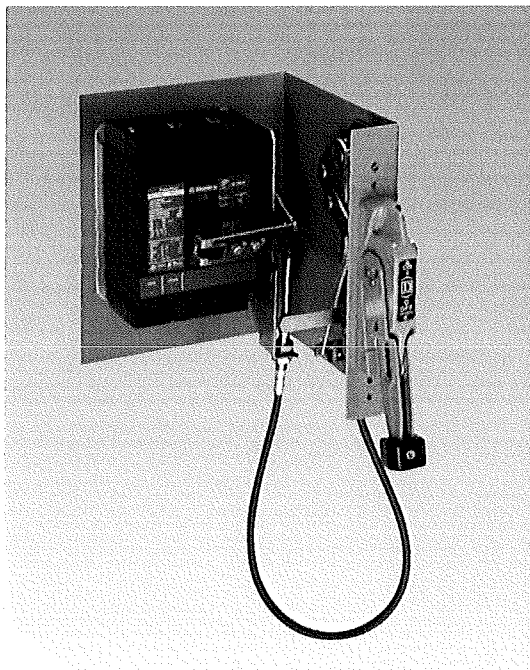

Consolidate Inventory

Reduce inventory costs with the Powerpact H- and J-Frame Molded Case Circuit Breakers. These circuit breakers are designed to work with common components like operating handles, auxiliary switches, shunt trips and many other accessories. They also offer savings in the form of rationalized mounting pans, door trims and enclosures.

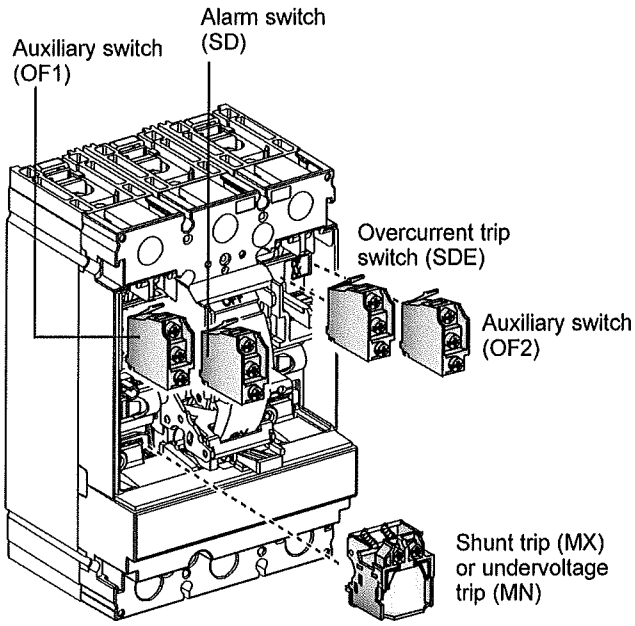

Simplify Installation

Field-installable accessories provide flexibility for late specification changes or installation at point of use. Auxiliary switches, shunt trip and undervoltage release are easy to install, reliable and common to many Powerpact Circuit Breakers.

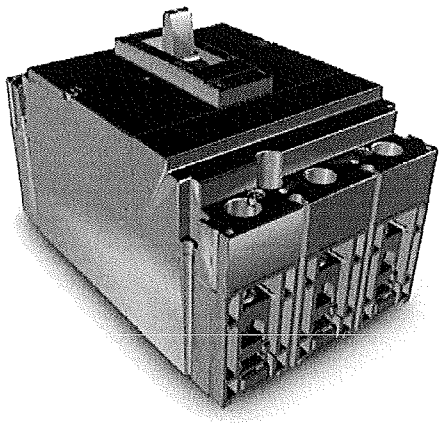

Streamline Design Integration

Comprehensive technical literature, CAD drawings and 3D models are available online to support the Powerpact H- and J-Frame Circuit Breaker line. In addition, 3D models can be downloaded in most CAD formats.

Easy to Convert

Unique snap-in lugs make converting between bus bar and lug options simple and easy. Whether the application calls for lugs on the line side, load side or both, conversions are simple, making the Powerpact H- and J-Frame Molded Case Circuit Breakers ideal for applications that require configuring products at the point of use. The terminal nut or mechanical lug is set on a plastic retainer that slides and snaps into place, without the use of tools.

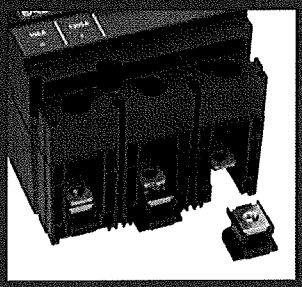

Bus Bar Option

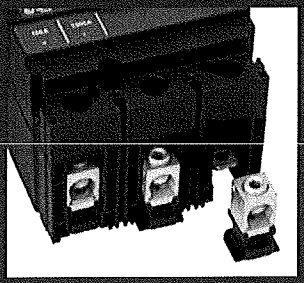

Lug Option

Powerpact® H- and J-Frame 15A to 250A Molded Case Circuit Breakers

Multiple Configurations

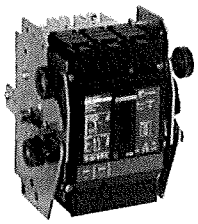

Cradle

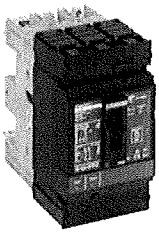

Plug-in Base

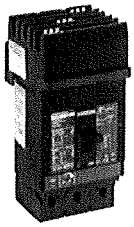

I-Line

Rear Connected

Ordering Flexibility for Various Applications

- **Purchase Standard Circuit Breaker**
  Features fixed trip unit capable of reverse connection.
- **Circuit Breaker and Separate Trip Units***
  Save valuable inventory costs by configuring products at point of use. Only three frame sizes are needed to cover the entire range from 15A to 250A (shown below with H-Frame Circuit Breaker).
- **Purchase the Complete Circuit Breaker with Field-Interchangeable Trip Unit***
  Respond to last minute specification changes with the flexibility of a field interchangeable trip unit.

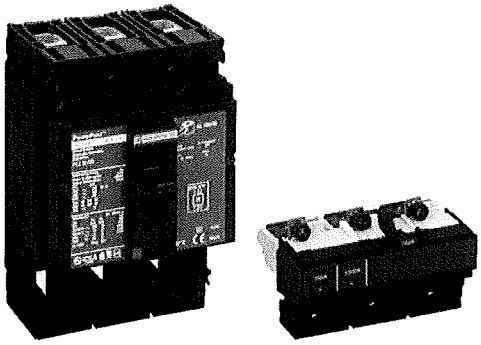

**Marked line and load and not suitable for reverse connection*

Contact your Square D sales representative for additional information. Or, visit www.us.SquareD.com.

Schneider Electric - North American Operating Division

1415 S. Roselle Road
Palatine, IL 60067
Tel: 847-397-2600
Fax: 847-925-7500

© 2004 Schneider Electric All Rights Reserved

Order Number 0611HO0401

03-04

JD, JG, JJ, JL MOLDED CASE CIRCUIT BREAKERS CHARACTERISTIC TRIP CURVE NO. 50-5

CIRCUIT BREAKER INFORMATION

Circuit Breaker Prefix	Continuous Ampere Rating	Maximum AC Voltage	Number of Poles
JD, JG, JJ, JL	150-250	600	2, 3

This curve is to be used for application and coordination purposes only. The **EZ-AMP** overlay feature at the bottom of the page should be used during coordination studies.

All time/current characteristic curve data is based on 40°C ambient cold start. Terminations are made with conductors of appropriate length and ratings.

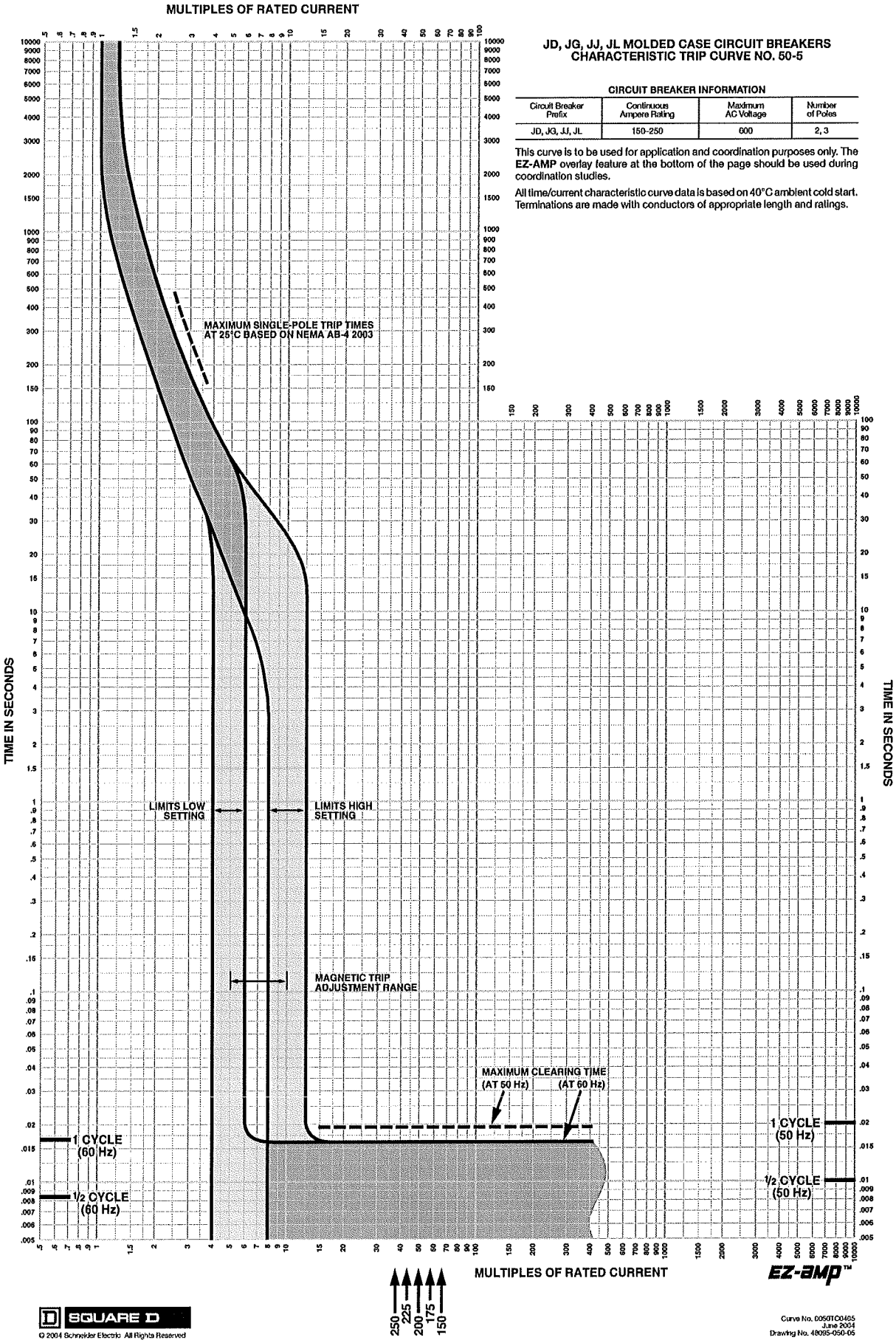

SQUARE D

© 2004 Schneider Electric All Rights Reserved

Curve No. 0050TC0465
June 2004
Drawing No. 48095-050-05

KOHLER. Power Systems

Remote Serial Annunciator III (RSA III)

ISO 9001
KOHLER. POWER SYSTEMS
NATIONALLY REGISTERED

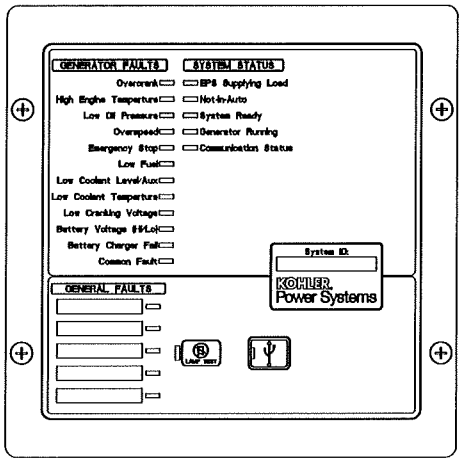

RSA III

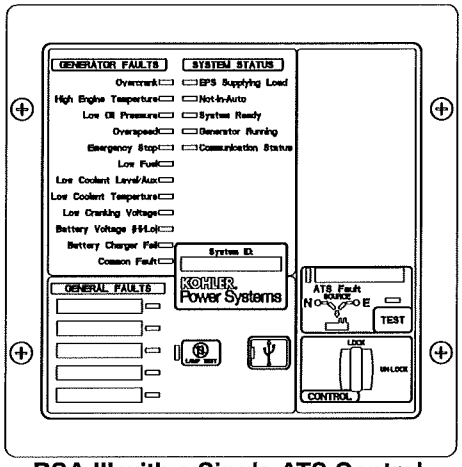

RSA III with a Single ATS Control

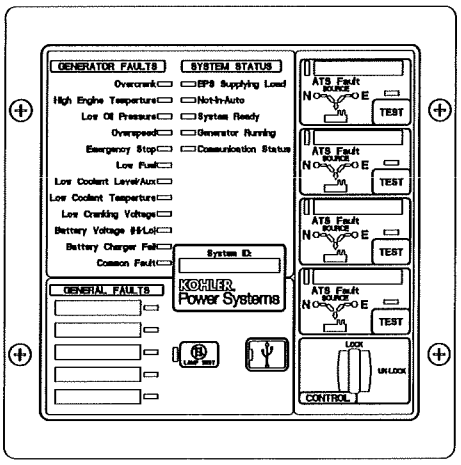

RSA III with Four ATS Controls

Remote Serial Annunciator III (RSA III) for Kohler® Controllers

- Monitors the generator set equipped with one of the following controllers:
  - KPC 1000
  - Decision-Maker® 3+
  - Decision-Maker® 550
  - Decision-Maker® 3000
  - Decision-Maker® 3500
  - Decision-Maker® 6000
- Allows monitoring of the common alarm, remote testing of the automatic transfer switch, and monitoring of the normal/emergency source for up to four ATS with any of the following controllers:
  - Decision-Maker® MPAC® 750, 1200, and 1500
  - MPAC® 1000 and 1500
- Configuration via a personal computer (PC) software.
- Writable surfaces (white boxes in illustrations) for user-defined selections.
- Uses Modbus® RTU protocol.
- Controller connections:
  - RS-485 for serial bus network
  - USB port. Connect a personal computer and use Kohler® SiteTech™ software to view events and adjust settings. *
  - 12-/24-volt DC power supply
  - 120/208 VAC power supply (available accessory)
- Meets the National Fire Protection Association Standard NFPA 110, Level 1.

Dimensions

- Dimensions—W x H x D, mm (in.).

  Surface Mounted:
  203 x 203 x 83 (8.0 x 8.0 x 3.3)

  Flush Mounted (Inside Wall):
  203 x 203 x 76 (8.0 x 8.0 x 3.0)
  Flush mounting plate W1: 254 (10.0)

* SiteTech™ software is available to Kohler authorized distributors and dealers.

Modbus® is a registered trademark of Schneider Electric.

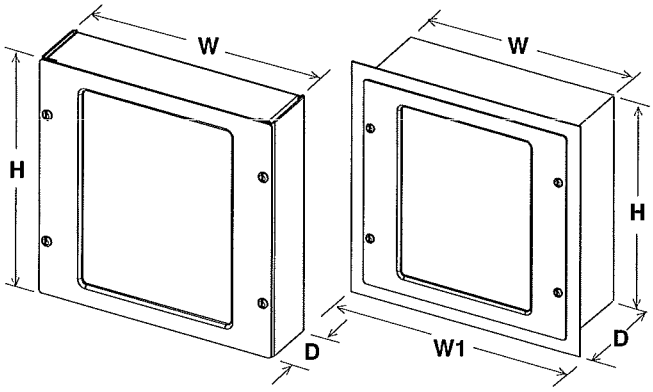

Surface Mounted Flush Mounted

Fault and Status Conditions	Fault LEDs	Fault Horn	System Ready LED	Generator Running LED	Communication Status LED
Overcrank Shutdown	Red	On	Red	Off	Green
High Engine Temperature Warning *	Yellow	On	Red	Green	Green
High Engine Temperature Shutdown	Red	On	Red	Off	Green
Low Oil Pressure Warning *	Yellow	On	Red	Green	Green
Low Oil Pressure Shutdown	Red	On	Red	Off	Green
Overspeed Shutdown	Red	On	Red	Off	Green
Emergency Stop *	Red	On	Red	Off	Green
Low Coolant Level/Aux. Shutdown	Red	On	Red	Off	Green
Low Coolant Temperature *	Yellow	On	Red	Off	Green
Low Cranking Voltage	Yellow	On	Red	Off	Green
Low Fuel—Level or Pressure *	Yellow	On	Red	Green or Off	Green
Not-In-Auto	Red	On	Red	Green or Off	Green
Common Fault	Red	On	Green	Green or Off	Green
Battery Charger Fault (1) *	Yellow	On	Red	Green or Off	Green
Battery Charger Fault (2) *	Yellow	On	Green	Green or Off	Green
High Battery Voltage *	Yellow	Off	Green	Green or Off	Green
Low Battery Voltage *	Yellow	Off	Green	Green or Off	Green
User Input #1 (Warning)	Yellow	Off	Green	Green or Off	Green
User Input #1 (Shutdown)	Red	On	Green	Off	Green
User Input #2 (Warning)	Yellow	Off	Green	Green or Off	Green
User Input #2 (Shutdown)	Red	On	Green	Off	Green
User Input #3 (Warning) (1) †	Yellow	Off	Green	Green or Off	Green
User Input #3 (Shutdown) (1) †	Red	On	Green	Off	Green
User Input #4 (Warning) (1)	Yellow	Off	Green	Green or Off	Green
User Input #4 (Shutdown) (1)	Red	On	Green	Off	Green
User Input #5 (Warning) (1)	Yellow	Off	Green	Green or Off	Green
User Input #5 (Shutdown) (1)	Red	On	Green	Off	Green
EPS Supplying Load	Yellow	Off	Green	Green	Green
Communications Status (Fault mode)	—	Off	Green or Red	Green or Off	Red
ATS Fault (RSA III with ATS Controls only)	Red	On	Red or Yellow	Green or Off	Green

Green LEDs appear as steady on when activated.
Yellow LEDs slow flash when activated except steady on with EPS supplying load and high battery voltage.
Red LEDs slow flash when activated except fast flash with loss of communication and not-in-auto.

Specifications

- LED indicating lights for status, warning, and/or shutdown.
- Power source with circuit protection: 12- or 24-volt DC
- Power source with120/208 VAC, 50/60 Hz adapter (option)
- Power draw: 200 mA
- Humidity range: 0% to 95% noncondensing
- Operating temperature range: -20°C to +70°C (-4°F to +158°F)
- Storage temperature range: -40°C to +85°C (-40°F to +185°F)
- Standards:
  - NFPA 110, level 1
  - UL 508 recognized
  - CE directive
  - NFPA 99
  - ENS 61000-4-4
  - EN6II-4-4 fast transient immunity
- RS-485 Modbus® isolated port @ 9.6/19.2/38.4/57.6 kbps (default is 19.2 kbps)
- USB device port
- NEMA 1 enclosure

(1) All generator set controllers except Decision-Maker® 3+ controller.
(2) Decision-Maker® 3+ controller only.
* May require optional kit or user-provided device to enable function and LED indication.
† Digital input #3 is factory-set for high battery voltage on the Decision-Maker® 3+ controller.
Modbus® is a registered trademark of Schneider Electric.

ATS Controls (RSA III with ATS controls only)

- ATS position LED (normal or emergency)
- Power source indicator LED (normal or emergency)
- ATS fault LED
- Key-operated lock/unlock switch for Test feature
- Test pushbutton

NFPA Requirements

- NFPA 110 compliant
- Engine functions:
  - High battery voltage warning *
  - High engine temperature shutdown
  - High engine temperature warning *
  - Low battery voltage warning *
  - Low coolant level/aux. shutdown
  - Low coolant temperature warning *
  - Low cranking voltage
  - Low fuel warning (level or pressure) *
  - Low oil pressure shutdown
  - Low oil pressure warning *
  - Overcrank shutdown
  - Overspeed shutdown
- General functions:
  - Audible alarm silence
  - Battery charger fault *
  - Lamp test
  - Master switch not-in-auto

Fault and Status LEDs and Lamp Test Switch

Alarm Horn. Horn sounds giving a minimum 90 dB at 0.1 m (0.3 ft.) audible alarm when a warning or shutdown fault condition exists except on high/low battery voltage or EPS supplying load.

Alarm Silenced. Red LED on lamp test switch lights when alarm horn is deactivated by alarm silence switch.

Alarm Silence Switch. Lamp test switch quiets the alarm during servicing. The horn will reactivate upon additional faults.

ATS Fault. Red LED lights when ATS fails to transfer.

Battery Charger Fail. LED lights if battery charger malfunctions. Requires battery charger with alarm contact.

Battery Voltage Hi/Lo. LED flashes if battery or charging voltage drops below preset level. LED lights steady if battery voltage exceeds preset level.

Common Fault. LED lights when a single or multiple common faults occur.

Communication Status. Green LED lights indicating annunciator communications functional. Red LED indicates communication fault.

EPS Supplying Load. LED lights when the Emergency Power System (EPS) generator set is supplying output current (Decision-Maker® 550, 3000, 3500, and 6000 controllers) or when transfer switch is in the emergency position (Decision-Maker® 3+ controller).

Emergency Stop. LED lights and engine stops when emergency stop is made. May require a local emergency stop switch on some Decision-Maker® 3+ controllers.

Generator Running. LED lights when generator set is in operation.

High Engine Temperature. Red LED lights if engine has shut down because of high engine coolant temperature. Yellow LED lights if engine coolant temperature approaches shutdown range. Requires warning sender on some models.

Lamp Test (Switch). Switch tests all the annunciator indicator LEDs and horn.

Low Coolant Level/Aux. LED lights when engine coolant level is below acceptable range on radiator-mounted generator sets only. When used with a Decision-Maker® 3+ controller, the LED indicates low coolant level or an auxiliary fault shutdown. Requires user-supplied low coolant level switch on remote radiator models.

Low Coolant Temperature. LED lights if optional engine block heater malfunctions and/or engine coolant temperature is too low. Requires prealarm sender on some models.

Low Cranking Voltage. LED lights if battery voltage drops below preset level during engine cranking.

Low Fuel (Level or Pressure). LED lights if fuel level in tank approaches empty with diesel models or fuel pressure is low on gas models. Requires customer-supplied switch.

Low Oil Pressure. Red LED lights if generator set shuts down because of insufficient oil pressure. Yellow LED lights if engine oil pressure approaches shutdown range. Requires warning sender on some models.

Not In Auto. LED lights when generator set master switch is in RUN or OFF/RESET position.

Overcrank. LED lights and cranking stops if engine does not start in either continuous cranking or cyclic cranking modes.

Overspeed. LED lights if generator set shuts down because of overspeed condition.

System Ready. Green LED lights when generator set master switch is in AUTO position and the system senses no faults. Red LED indicates system fault.

User-Defined Digital Inputs #1-#5. Monitors five digital auxiliary inputs (warnings or shutdowns). Individual red LEDs flash when a fault occurs or the status changes. User-defined digital inputs are selected via the RSA III master for local or remote (generator set or ATS). The user-defined digital input can be assigned at the controller or via PC using SiteTech™ setup software.

Communications (Shown with RSA III with ATS Controls)

Local Single (Master) Connection

A single RSA III connects directly to the controller's communication port with an RS-485 cable.

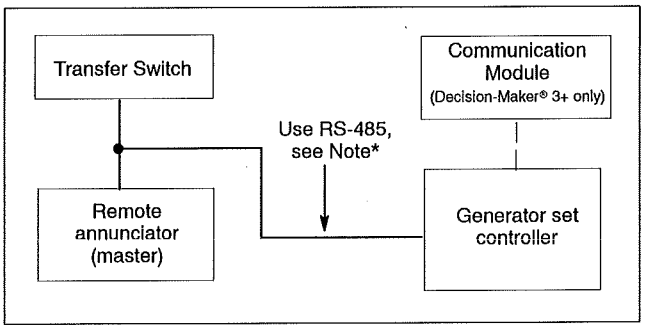

Note*: Use RS-485 for a total of up to 1220 m (4000 ft.) maximum from the first device to the last device.

Local Multiple (Master/Slave) Connections

A single RSA III master connects directly to the controller's communication port with an RS-485 cable. Additional RSA III slaves can connect to the single master RSA III. Status of the RSA III master is annunciated on the RSA III slave panel.

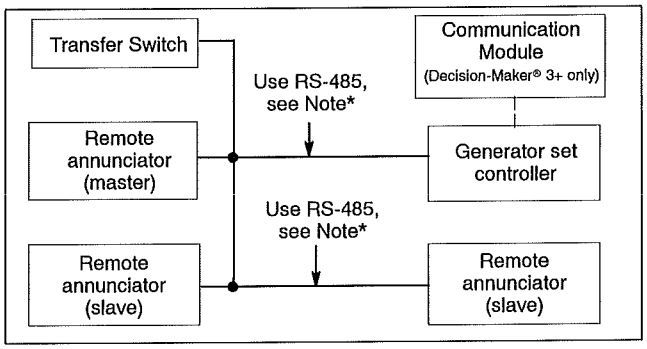

KOHLER CO., Kohler, Wisconsin 53044 USA
Phone 920-457-4441, Fax 920-459-1646
For the nearest sales and service outlet in the
US and Canada, phone 1-800-544-2444
KOHLERPower.com

Kohler Power Systems
Asia Pacific Headquarters
7 Jurong Pier Road
Singapore 619159
Phone (65) 6264-6422, Fax (65) 6264-6455

Modbus®/Ethernet, Single Master or Multiple Master/Slave Connections (Shown with RSA III with ATS Controls)

An RSA III master communicates with a controller and RSA III slaves through an Ethernet network. A Modbus®/Ethernet converter is required for each RSA III and controller. RS-485 cable connects the RSA III to the converter. Category 5e (Cat 5e) network cable connects the Modbus®/Ethernet converter to the Ethernet.

Note: Combining RSA III remote annunciators with the RSA II and RSA 1000 is permissible provided that the master remote annunciator is an RSA III remote annunciator.

Note*: Use RS-485 for a total of up to 1220 m (4000 ft.) maximum from the first device to the last device.

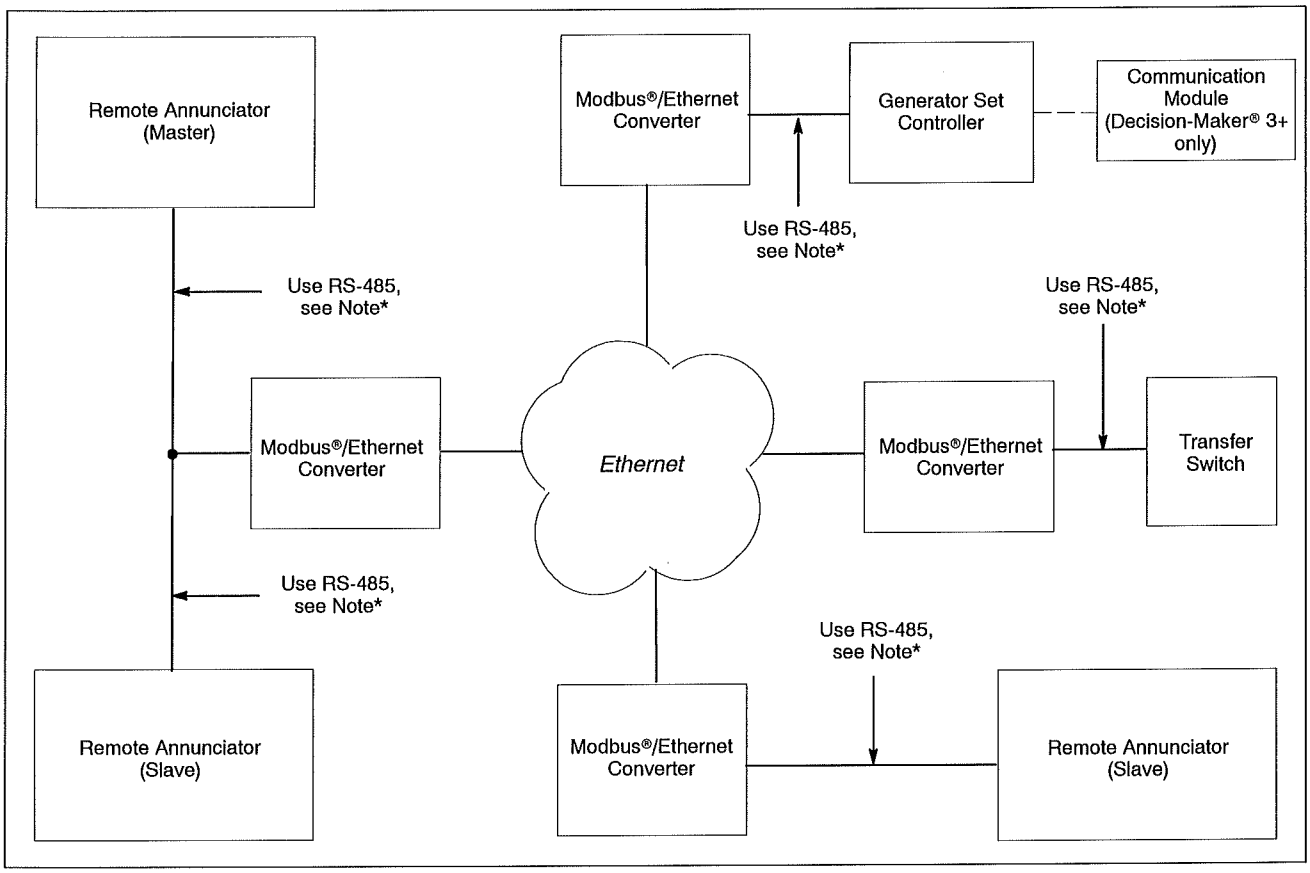

Accessories

- ❑ Power source adapter kit 120/208 VAC, 50/60 Hz.
- ❑ Modbus®/Ethernet converter GM41143-KP2 for serial to Ethernet communication.
- ❑ Communication module GM32644-KA1 or GM32644-KP1 is required with Decision-Maker® 3+ controllers.

Modbus® is a registered trademark of Schneider Electric.

DISTRIBUTED BY:

Availability is subject to change without notice. Kohler Co. reserves the right to change the design or specifications without notice and without any obligation or liability whatsoever. Contact your local Kohler® generator set distributor for availability.

© 2014 by Kohler Co. All rights reserved.

KOHLER POWER SYSTEMS

Float/Equalize Battery Charger

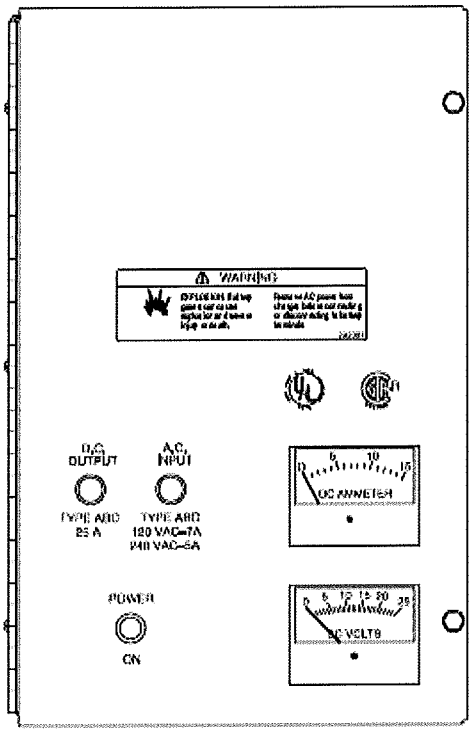

ISO 9001 KOHLER POWER SYSTEMS NATIONALLY REGISTERED

Standard Features

- Kohler automatic battery chargers feature two charging modes to keep lead-acid and nickel-cadmium batteries fully charged without overcharging. The battery charger automatic float-to-equalize operation maintains battery voltage with no manual intervention.
- Temperature compensation feature prevents overcharging or undercharging battery at high/low ambient temperatures.
- Current-limiting circuitry prevents battery charger from overload at low battery voltage and during a short circuit. The ten amp DC current limit allows the battery charger to remain connected to the battery during engine cranking.
- Battery charger complies with NFPA 110 code requirements when equipped with optional alarm circuit board. Alarm board features low battery voltage, high battery voltage, and battery charger malfunction alarm contacts.

Specifications

Installed Battery	NFPA 110 Alarm Outputs	Output		Number of Cells	
		Voltage	Amps	Lead Acid	Ni-Cd
PAD-292863	Yes	12	10	6	9

Battery Charger Kit	PAD-292863
Input Voltage	120/240 VAC
Input Frequency	120/240VAC, 50/60 Hz
DC Voltage Regulation	±1%
Dimensions (L x W x D)	271 x 143 x 422 mm (10.67 x 5.63 x 16.63 in.)
Weight	11.8 kg (26 lb.)

Float/Equalize Battery Charger, continued

Automatic Float to Equalize

When the battery loses its charge, the battery charger operates in the High Rate Constant Current Mode until the battery voltage rises to the preset equalize level.At the preset equalize level, the battery charger switches to the constant voltage Equalize Mode until the current required to maintain this voltage drops to 50% of the battery charger's high rate current.The battery charger then switches to the lower constant voltage Float Mode when the battery nears full charge. The battery charger continues to operate in this mode until AC input power disconnects or the current required to maintain the battery at the float voltage setting exceeds 6 amps.

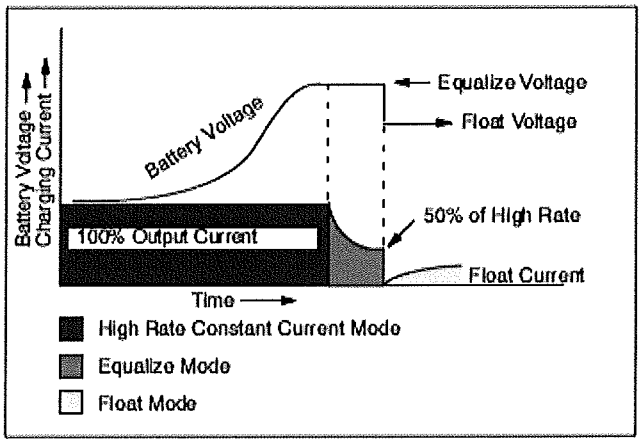

Figure 1

Temperature Compensation

The battery charger compensates for battery temperature using a negative temperature coefficient. The battery charger provides temperature compensation of -2mv/°C per cell over the ambient temperature range of -40°C up to 60°C. The temperature compensation automatically adjusts the float and equalize voltage settings to prevent the battery from overcharging at high ambient temperatures and undercharging at low ambient temperatures.

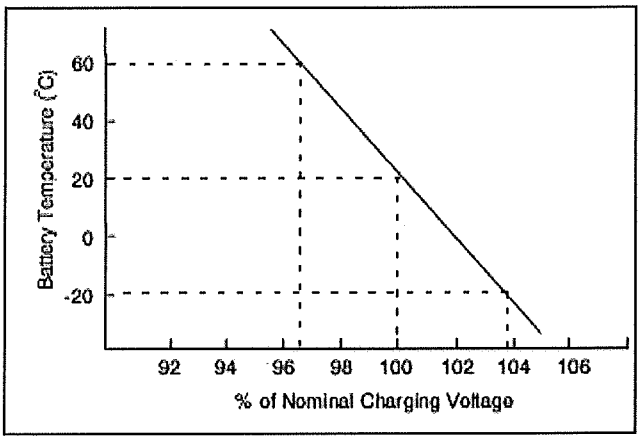

Figure 2

Standard Features

- **Ammeter and voltmeter** indicate battery charging rate with 5% full-scale accuracy. POWER ON lamp indicates battery charger is operating.
- **AC input and DC output fuses** prevent battery charger damage from abnormal overload and short-circuit conditions.
- **Operational temperature range** is from 40°C (--40°F) to 60°C (140°F). Battery charger float equalize voltage automatically adjust throughout the temperature range.
- **Reverse polarity protection circuitry** prevents battery charger from energizing if improperly connected.
- **Internal terminal blocks** for AC input and DC output/ sensing lead connections.
- **DC voltage regulation** of ±1% from no load to full load and AC input line voltage variations of ±10%.
- **UL-1012** listed/**CSA** certified.
- **Wall-mount, slotted enclosure** with knockouts for customer conduit installation.
- **Reconnection blocks** allow operation at 120 or 240 volts AC, single phase, 50 or 60 hertz.
- **Battery charger circuitry protected** from AC line and DC load voltage spikes and transients.
- **Terminal block** for remote battery sensing leads.
- **Automatic float-to-equalize operation** with individual potentiometer adjustments. Charge up to 12 lead-acid or 18 nickel-cadmium battery cells.
- **No adjustments are necessary** for lead-acid or nickel-cadmium batteries.
- **Oversized transformer and SCR heatsink** allow constant current charging at 10 amps up to the equalize voltage setting for fastest battery charging.

Note: The battery charger will discharge the engine starting battery(ies) when the battery charger is connected to the battery(ies) and is not connected to an AC power supply. To prevent engine starting battery(ies) discharge, install battery charger relay kit GM39659.

Float/Equalize Battery Charger, continued

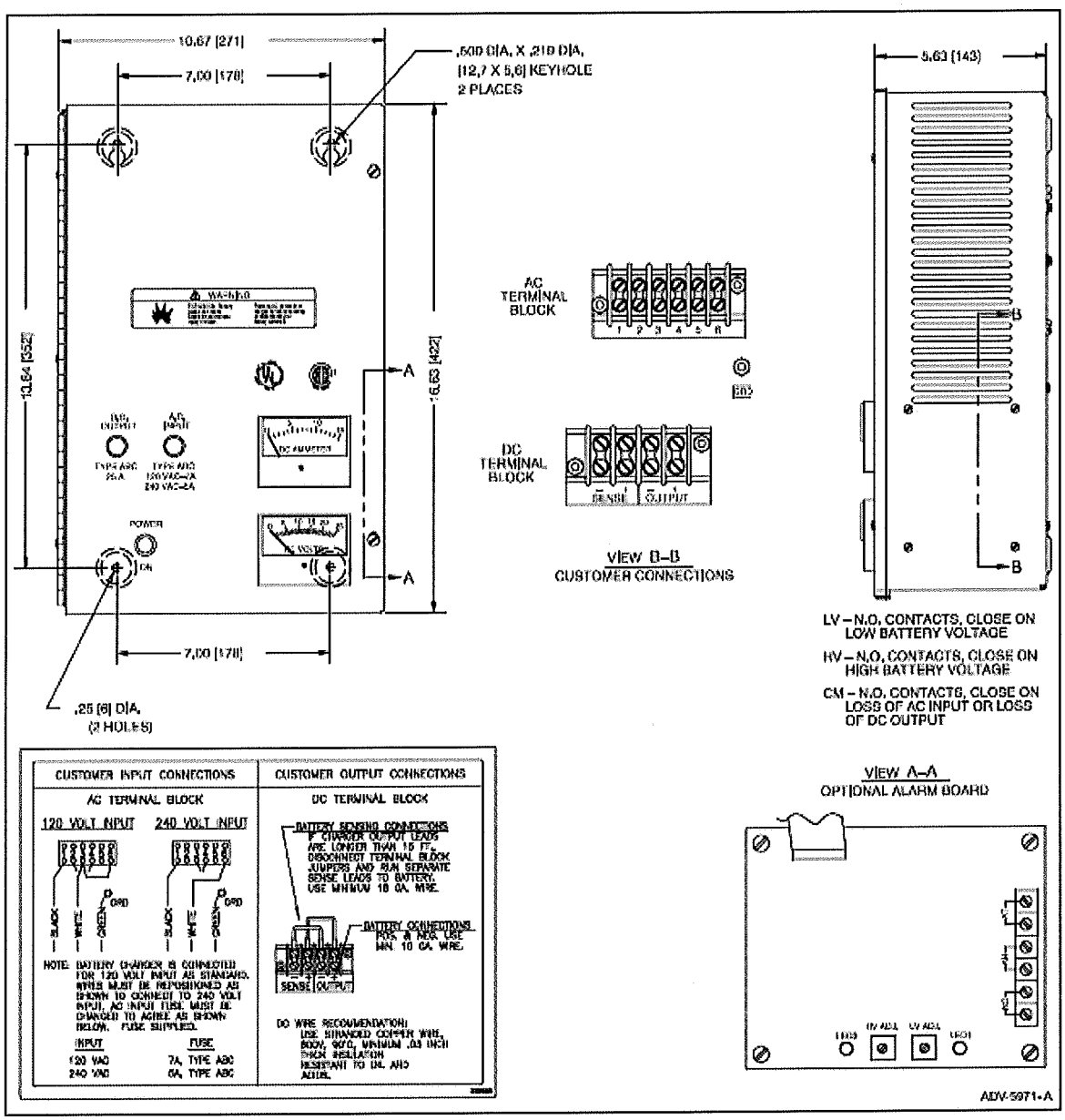

KOHLER POWER SYSTEMS

Sound Enclosure with Subbase Fuel Tank Package

ISO 9001 KOHLER POWER SYSTEMS NATIONALLY REGISTERED

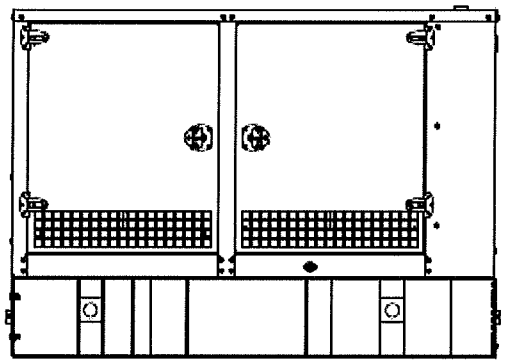

Enclosure with Standard Subbase Fuel Tank

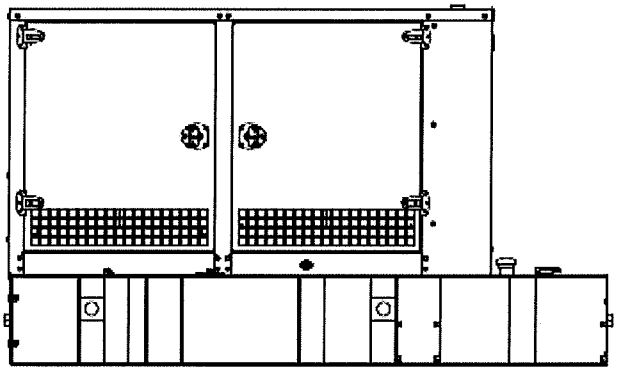

Enclosure with State Code Subbase Fuel Tank

Sound Enclosure Standard Features

- Internal-mounted critical silencer and flexible exhaust connector.
- Lift base or tank mounted, steel construction with hinged and removable doors.
- Fade-, scratch-, and corrosion-resistant Kohler® Power Armor cream beige automotive-grade textureed finish.
- Enclosure has four large access doors which allow for easy maintenance.
- Lockable, flush-mounted door latches.
- Vertical air inlet and outlet discharge to redirect air and reduce noise.
- Certified to withstand 241 kph (150 mph) wind load rating.
- Lift base or tank-mounted, steel construction with hinged doors.
- Accoustic insulation that meets UL 94 HF1 flammability classification and repels moisture absorption.
- Sound attentuated enclosure that uses up to 51 mm (2 in.) of acoustic insulation.

Subbase Fuel Tank Features

- The fuel tank has a Power Armor Plus textured epoxy-based rubberized coating.
- The above-ground rectangular secondary containment tank mounts directly to the generator set, below the generator set skid (subbase).
- Both the inner and outer tanks have emergency relief vents.
- Flexible fuel lines are provided with subbase fuel tank selection.
- The secondary containment generator set base tank meets UL 142 tank requirements. The inner (primary) tank is sealed inside the outer (secondary) tank. The outer tank contains the fuel if the inner tank leaks or ruptures.

Sound Enclosure with Subbase Fuel Tank Package, continued

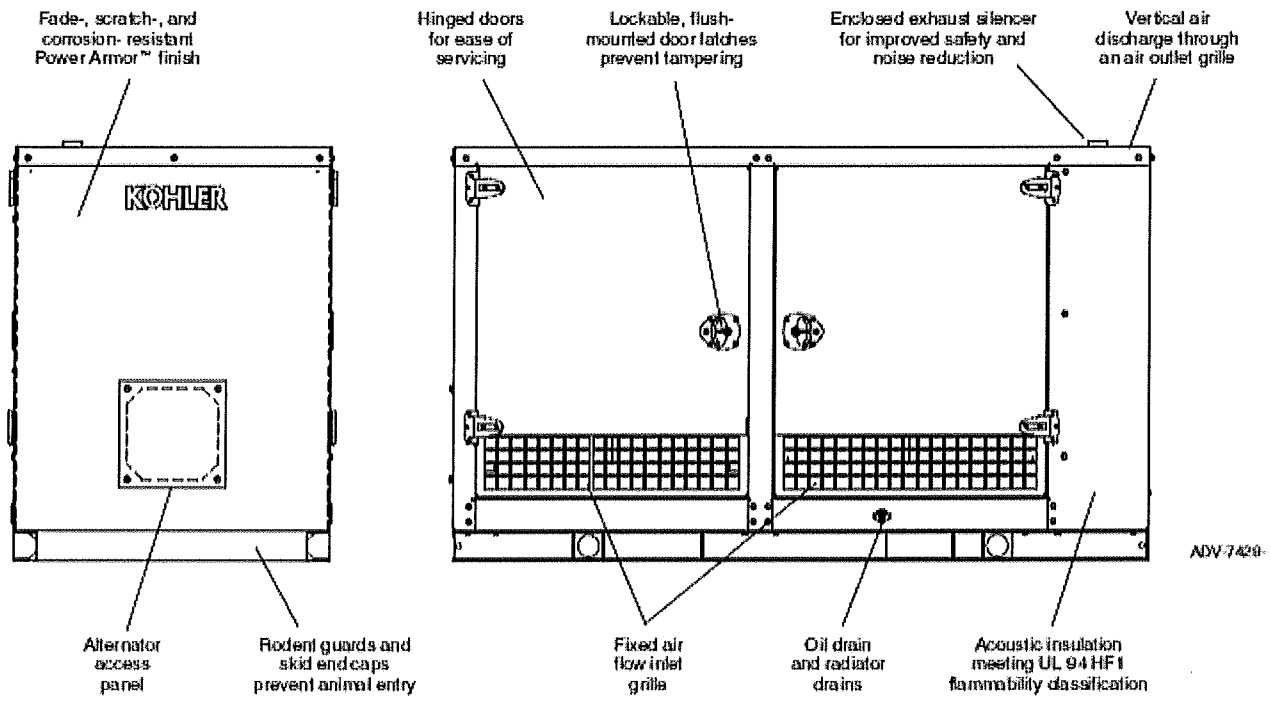

Note: 20-40REOZJC models shown, other models are similar. Refer to the respective ADV drawings for details.

Sound Enclosure Features

- Available in steel (14 gauge) formed panel, solid construction. Preassembled package offering corrosion resisitent, dent resilient structure mounting directly to lift base or fuel tank.
- Power Armor automotive-grade finish resulting in advanced corrosion and abrasion protection as well as enhanced edge coverage and color retention.
- Internal exhaust silencer offering maximum component life and operator safety.
- Interchangeable modular panel construction. Allows complete serviceability or replacement without compromising enclosure design.
- Cooling/combustion air intake with a horizontal air inlet. Sized for maximum cooling airflow.
- Service access. Multi-personnel doors for easy access to generator set control and servicing of the fuel fill, fuel gauge, oil fill and battery.
- Cooling air discharge. Weather protective design featuring vertical air discharge. Redircts cooling air up and above the enclosure to reduce ambient noise.
- Attenuated design. Acoustic insulation UL 94 HF1 listed for flame resistance offering up to 51 mm (2 in.) mechanically restrained acoustic insulation.
- Cooling air discharge. The sound enclosures include acoustic insulation with urethane film.
- Note: Installing an additional lenth of exhaust tail pipe may increase backpressure levels. Please refer to the generator set spec sheet for the maximum backpressure value.

Sound Enclosure with Subbase Fuel Tank Package, continued

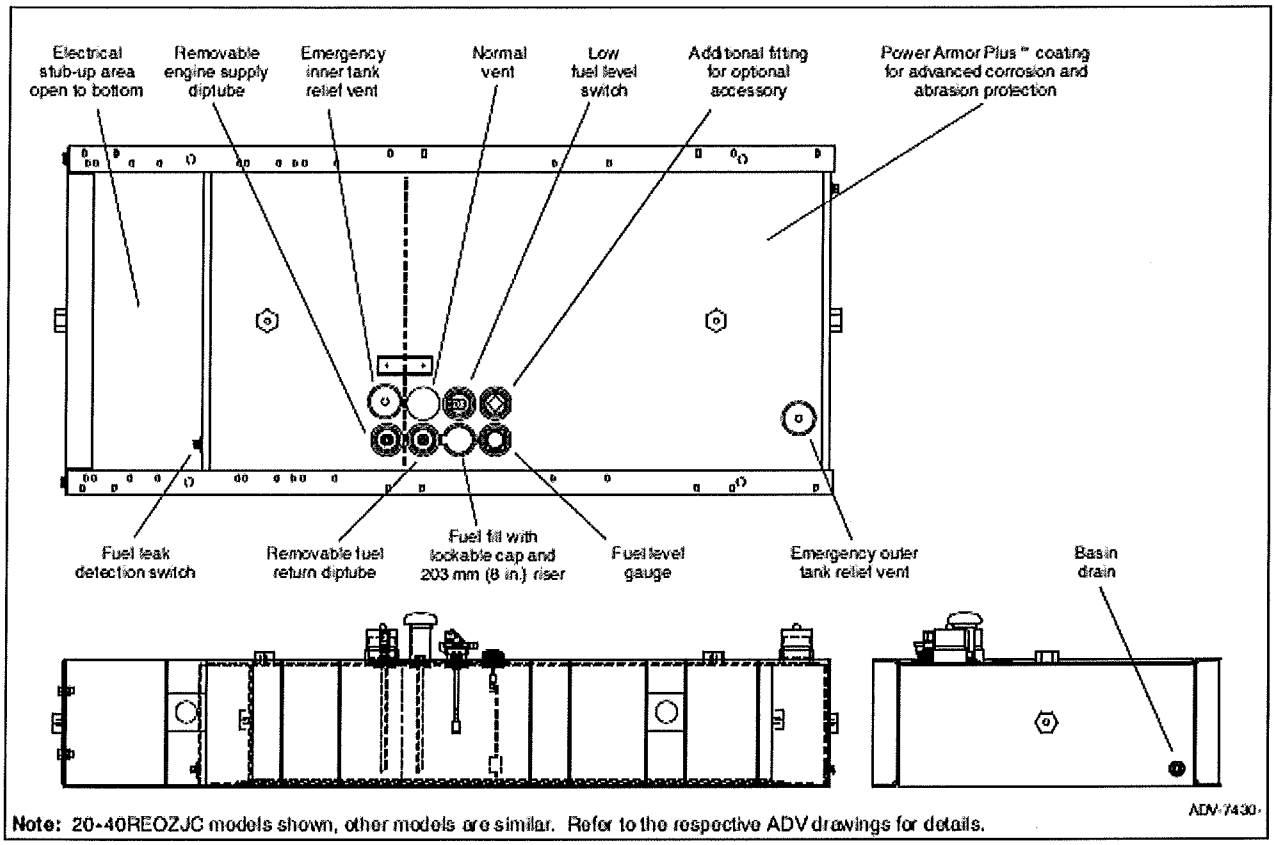

Note: 20-40REOZJC models shown, other models are similar. Refer to the respective ADV drawings for details.

Subbase Fuel Tank

- Extended operation. Usable tank capacity offers full load standby operation of up to 72 hours.
- Power Armor Plus textured epoxy-based rubberized coating that creates an ultra-thick barrier between the tank and harsh environmental conditions like humidity, saltwater, and extreme temperatures, and provides an advanced corrosion and abrasion protection.
- UL listed. Secondary containment generator set base tank meeting UL 142 tank requirements.
- NFPA compliant. Designed to comply with the installation standards of NFPA 30 and NFPA 37.
- Integral external lift lugs. Enables crane with spreader-bar lifting of the complete package (empty tank, mounted generator set, and enclosure) to ensure safety.
- Emergency pressure relief vents. Vents ensure adequate venting of inner and outer tank under extreme pressure and/or emergency conditions.
- Normal vent cap. Vent is raised above lockable fuel fill.
- Low fuel level switch. Annunciates a 50% low fuel level condition at generator set control.
- Leak detection switch. Annunciates a contained primary tank fuel leak condition at generator set control.
- Electrical stub-up.

Fuel Tank Capacity, L (gal.)	Est. Fuel Supply Hours at 60 Hz with Full Load	Max. Length, mm (in.)	Max. Width, mm (in.)	Enclosure and Fuel Tank Length, mm (in.)	Enclosure and Fuel Tank Width, mm (in.)	Enclosure and Fuel Tank Weight, kg (lb.)	Enclosure and Fuel Tank Height, mm (in.)	Fuel Tank Height (H), mm (in.)	Sound Pressure with full load at 7m (23ft.), dB(A)	Max. Height, mm (in.)	Weight, kg (lb.)
492 (130)	24/26			2320 (91.3)	1077 (42.4)	1438 (3170)	1824 (71.8)	457 (18)	68		

KOHLER POWER SYSTEMS

ISO 9001 KOHLER POWER SYSTEMS NATIONALLY REGISTERED

Integral Voltage Regulator with Kohler® Decision-Maker® 3000 and Menu-Driven Selections (15-1000 kW Generator Set Models)

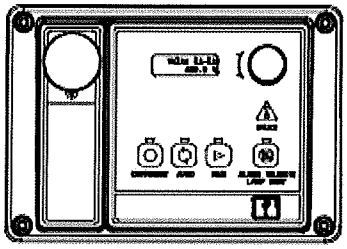

Decision-Maker® 3000 Controller with Integral Voltage Regulator

The voltage regulator is integral to the controller and uses patented hybrid voltae regulator design providing ±0.5% no-load to full-load regulation using root-mean-square (RMS) voltage sensing. The voltage regulator features three-phase sensing and is available for 12- or 24-volt engine electrical systems.

Voltage Regulators

The following information provides general features, specifications, and functions of available voltage regulators.

This information generally applies to a single generator set and multiple generator sets with paralleling applications. Refer to the respective generator set specification sheet and see your authorized distributor for information regarding specific voltage regulator applications and availability.

Integral Voltage Regulators with Decision-Maker® 3000 Controllers

Calibration	Digital Display	Range Settings	Default Selection
Voltage Adjustment	Volt Adjust	±10% of System Voltage	System Voltage
Underfrequency Unload or Frequency Setpoint	Frequency Setpoint	42 to 62 Hz	2.5 Hz Below Nominal Frequency
Underfrequency Unload Slope	Slope	0 to 10% of System Voltage (Volts per Cycle)	5% of System Voltage

Voltage Regulators, continued

Specification/Feature	Integral with Decision-Maker® 3000
Generator Set Availability	15-1000 kW
Type	Patented Hybrid Design
Status and Shutdown Indicators	LEDs and Text LCD Display
Operating Temperature	-40°C to 70°C (-40°F to 158°F)
Storage Temperature	-40°C to 85°C (-40°F to 185°F)
Humidity	5-95% Non-Condensing
Circuit Protection	Solid-State, Redundant Software and Fuses
Sensing, Nominal	100-240 Volts (L-L), 50-60 Hz
Sensing Mode	RMS, Single- or 3-Phase
Input Requirements	8-36 VDC
Continuous Output	5 VDC @ 100mA max. 5.0 ADC with GM88453 Activator Board
Maximum Output	5 VDC @ 100mA max. 7.8 ADC with GM88453 Activator Board
Transition Frequency	42.0-62.0Hz
Exciter Field Resistance	4-30 Ohms with GM88453 Activator Board
No-Load to Full-Load Voltage Regulation	±0.5%
Thermal Drift	<0.5% (-40°C to 70°C) [-40°F to 158°F] Range
Response Time	Less than 5μS
System Voltage Adjust.	±10%
Voltage Adjustment	Controller Menu Knob
Remote Voltage Adjustment	not available
Paralleling Capability	not available
VAR/PF Control Input	not available

Integral Voltage Regulator with Decision-Maker® 3000 Controller

- The Decision-Maker® 3000 digital display and pushbutton/rotary dial provide access to data. A two-line LCD display provides complete and concise information.
- The Decision-Maker® 3000 graphical display and pushbutton/rotary dial provide access to data. A five-line, 35-characters per line LCD display provides complete and concise information include gain, ramp rate, reactive droop, VAR control (P, I, D gains) and PF control (P, I, D gains).
- The controllers provide ISO 8528-5, Class G3, compliance for transient response on some 20-300 kW generator set models. Both cotrollers support Modbus®.
- These controllers can control Fast Response™ II, Fast Response™ X, and wound field alternators using the GM88453 activator board.

Voltage Regulator Menu

- Voltage adjustment, ±10% of system voltage
- V/Hz cut-in, 42-62 Hz
- Underfrequency unload slope, 0-10% of system voltage

Generator Set Calibration Menu

- L1-L2 volts
- L2-L3 volts (3-phase)
- L3-L1 volts (3-phase)
- L1-N volts
- L2-N volts
- L3-N volts (3-phase)

KOHLER POWER SYSTEMS

Alternator Data

TECHNICAL INFORMATION BULLETIN

Alternator Data Sheet

Alternator Model: 4P7BX
Frequency: 60 Hz
Speed: 1800 RPM
Leads: 12 (6 Lead, 600 Volt)

Voltage L-N/L-L	Phase	Power Factor	Connection	kW* (kVA) Class B 80°C Continuous	Class F 90°C Lloyds	Class F 95°C ABS	Class F 105°C Continuous	Class F 130°C Standby	Class H 125°C Continuous	Class H 150°C Standby
139/240 277/480	3	0.8	Wye	47.5 (59.0)	51.0 (63.5)	52.0 (65.0)	54.5 (68.0)	60.0 (75.0)	58.5 (73.0)	61.5 (76.5)
127/220 254/440	3	0.8	Wye	47.0 (58.5)	49.5 (61.5)	50.5 (63.0)	52.0 (65.0)	57.5 (71.5)	56.0 (70.0)	59.5 (74.0)
120/208 240/416	3	0.8	Wye	45.5 (56.5)	47.0 (58.5)	48.0 (60.0)	49.5 (61.5)	54.5 (68.0)	53.5 (66.5)	57.0 (71.0)
110/190 220/380	3	0.8	Wye	41.5 (51.5)	42.5 (53.0)	43.5 (54.0)	45.0 (56.0)	49.5 (61.5)	48.5 (60.5)	52.0 (65.0)
120/240	3	0.8	Delta	45.5 (56.5)	47.0 (58.5)	48.0 (60.0)	49.5 (61.5)	54.5 (68.0)	53.5 (66.5)	57.0 (71.0)
120/240	1	1.0	Dogleg	38.0 (38.0)	39.5 (39.5)	40.0 (40.0)	41.5 (41.5)	44.5 (44.5)	44.0 (44.0)	46.5 (46.5)
120/240	1	0.8	Dogleg	28.5 (35.5)	30.0 (37.5)	30.5 (38.0)	31.5 (39.0)	34.0 (42.5)	33.5 (41.5)	35.5 (44.0)
347/600	3	0.8	Wye	47.0 (58.5)	49.5 (61.5)	50.5 (63.0)	52.0 (65.0)	57.5 (71.5)	56.0 (70.0)	59.5 (74.0)

* All data tested in accordance with IEEE Standard 115. Kohler Co. reserves the right to change the design or specifications without notice and without any obligation or liability whatsoever.

Submittal Data: 139/240 Volts, 0.8 PF, 1800 RPM, 60 Hz, 3 Phase, 130°C Rise

	Symbol	PerUnit	Ohms
Typical Cold Resistances			
Phase Resistance		0.035	0.027
Rotor Resistance		7.439	5.714
Typical Reactances			
Synchronous			
Direct	X_d	3.579	2.749
Quadrature	X_q	1.738	1.335
Transient			
Unsaturated	X'_{du}	0.392	0.301
Saturated	X'_d	0.345	0.265
Subtransient			
Direct	X''_d	0.163	0.125
Quadrature	X''_q	0.148	0.114
Negative Sequence	X_2	0.155	0.119
Zero Sequence	X_0	0.012	0.009

	Symbol	Value
Typical Time Constants		
Armature Short Circuit	T_a	0.008 sec.
Transient Short Circuit	T'_d	0.068 sec.
Transient Open Circuit	T'_{do}	0.702 sec.
Typical Field Current		
Full Load	If_{FL}	17.9 amps
No Load	If_{NL}	4.0 amps
Typical Short Circuit Ratio		0.277
Harmonic Distortion		
RMS Total Harmonic Distortion		3.27%
Max. Single Harmonic		5th
Deviation Factor (No Load, L-L)		<5%
Telephone Influence Factor		61.2
Insulation Class		
per NEMA MG1-1.66		H
Phase Rotation		ABC

4P7BX, 60 Hz, 139/240, 277/480 Volts, Wye
TYPICAL ALTERNATOR EFFICIENCY*

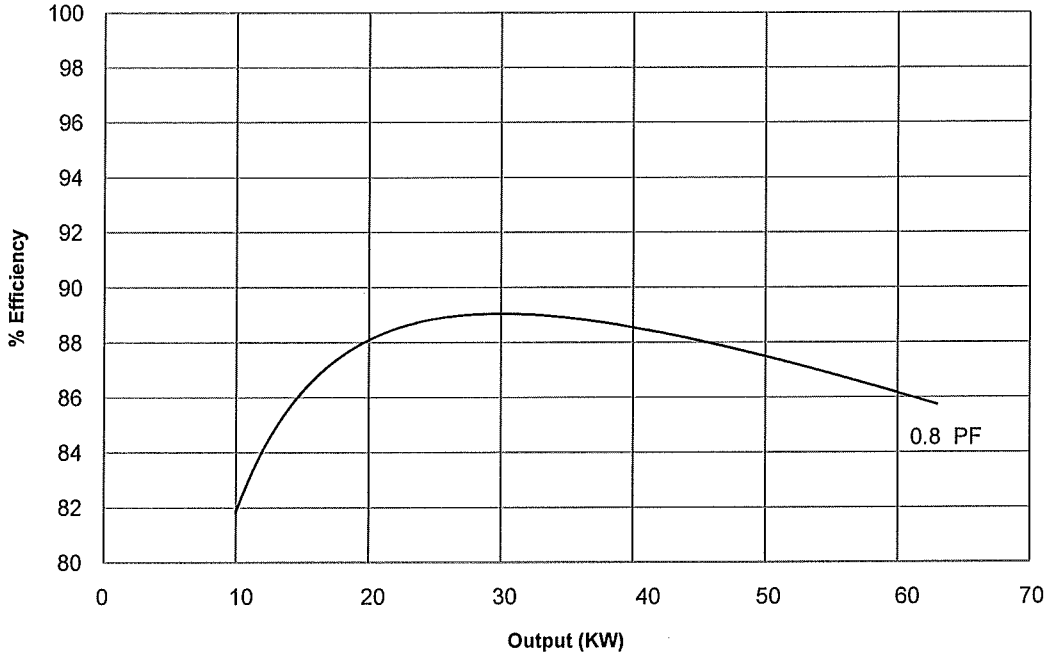

4P7BX, 60 Hz, 139/240, 277/480 Volts, Wye
TYPICAL MOTOR STARTING CHARACTERISTICS*

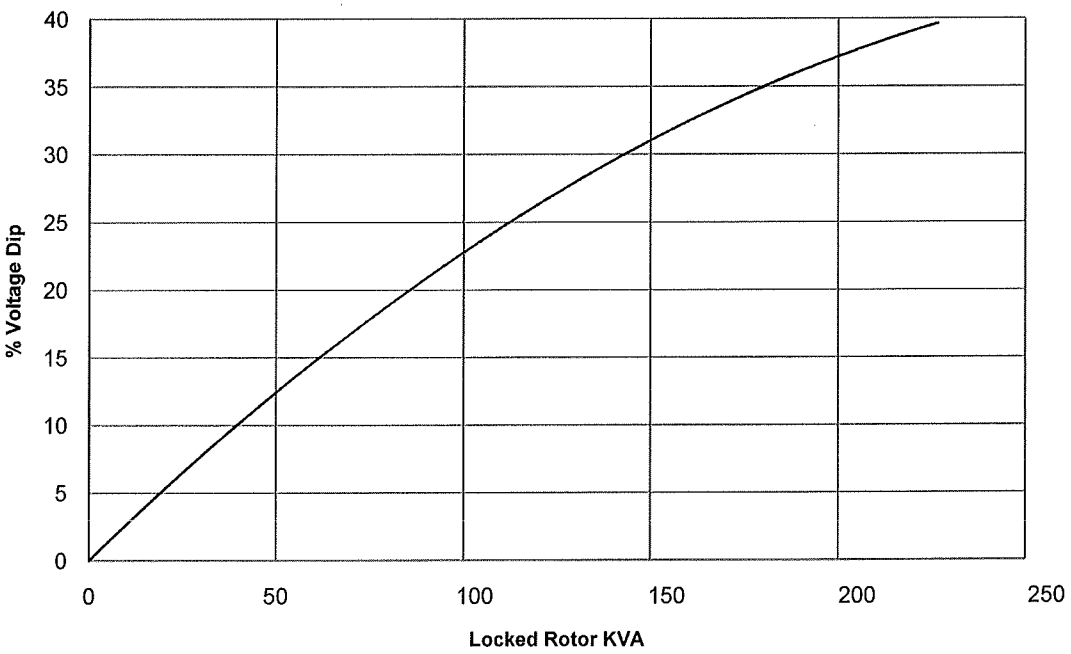

* All data tested in accordance with IEEE Standard 115. Kohler Co. reserves the right to change the design or specifications without notice and without any obligation or liability whatsoever.

4P7BX, 60 Hz, Low Wye or Delta Connection
SHORT CIRCUIT DECREMENT CURVE

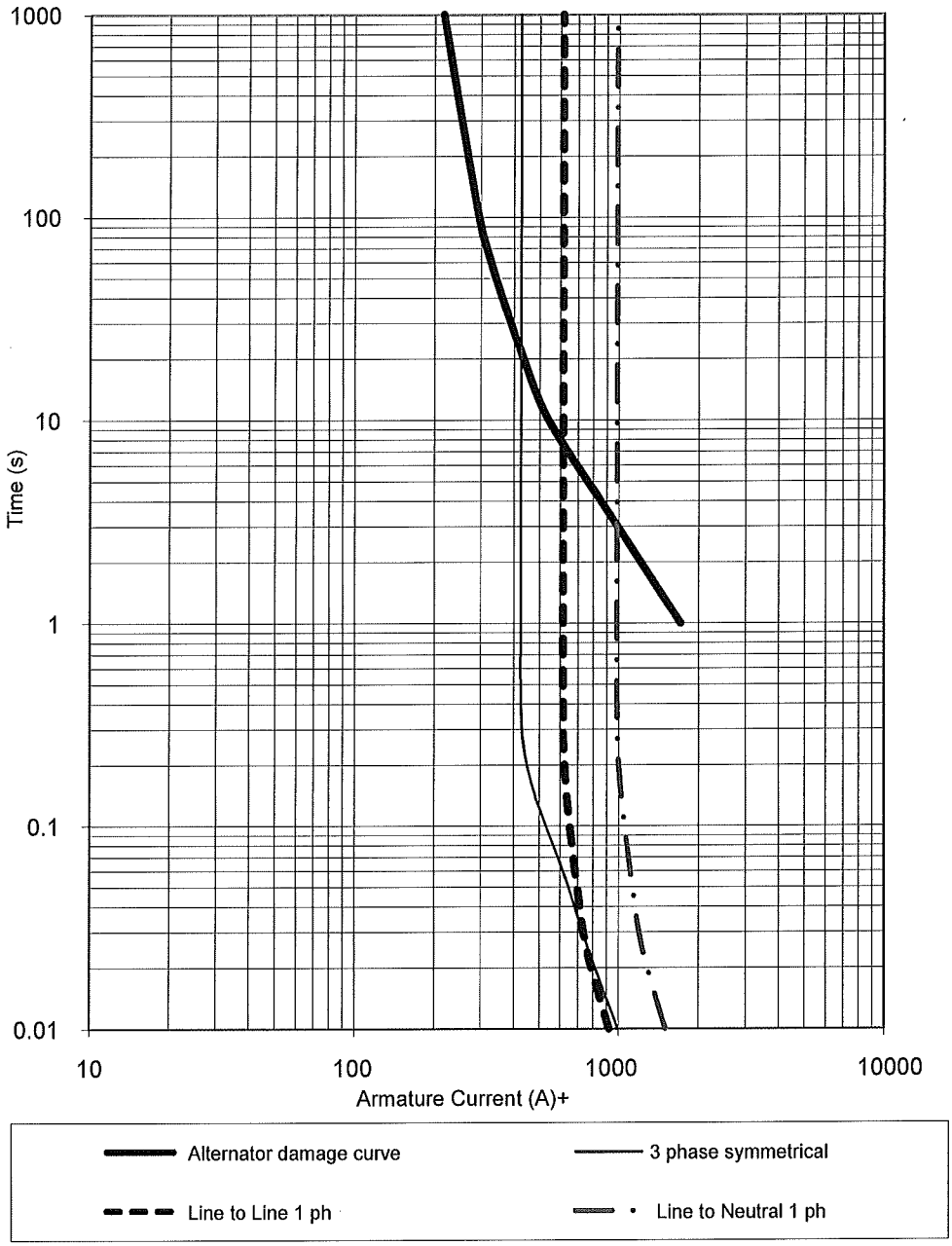

* Instantaneous current (t=0) is asymmetric. Divide by 1.73 for symmetric.

4P7BX, 60 Hz, High Wye Connection
SHORT CIRCUIT DECREMENT CURVE

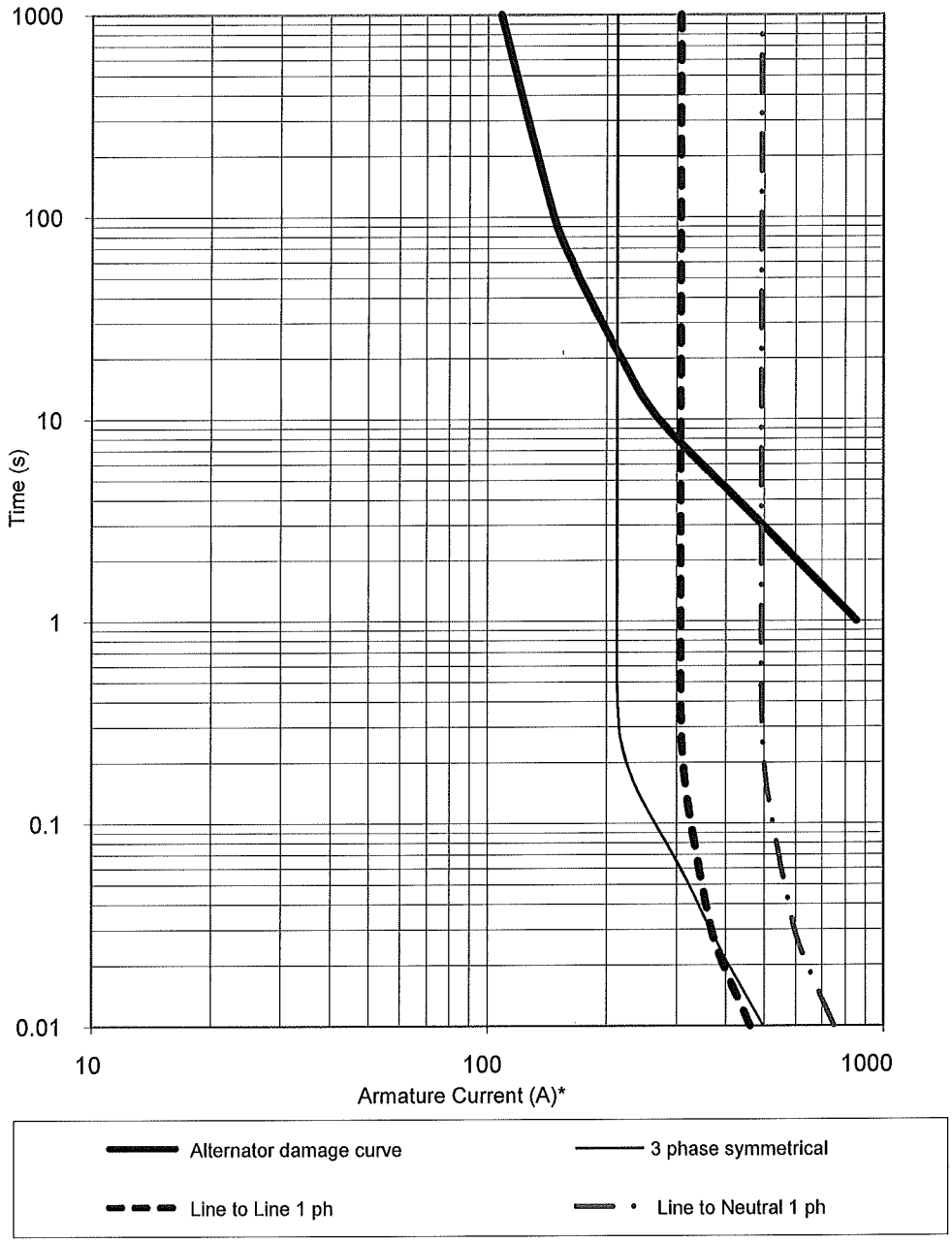

* Instantaneous current (t=0) is asymmetric. Divide by 1.73 for symmetric.

KOHLER POWER SYSTEMS

Sound Data

TECHNICAL INFORMATION BULLETIN

Generator Set Sound Data Sheet

			Sound Pressure Data in dB(A)			
Generator Set Model	**Hz**	**Load**	**Raw Exhaust**	**Open Unit, Isolated Exhaust**	**Weather Enclosure**	**Sound Enclosure**
60REOZJD	60	100% Load	107.5	80.6	78.7	68.6
		No Load	95.0	79.3	77.4	65.3

Note: Sound pressure data is the logarithmic average of eight perimeter measurement points at a distance of 7 m (23 ft.), except Raw Exhaust data which is a single measurement point at 1 m (3.3 ft.) from the mouth of a straight pipe exhaust.

60REOZJD	**60Hz**

				Sound Pressure Levels dB(A)								
				Octave Band Center Frequency (Hz)								Overall Level
Load	Distance, m (ft)	Enclosure	Measurement Position	63	125	250	500	1000	2000	4000	8000	
100% Load	7 (23)	Sound	Right	47.8	55.5	59.2	62.4	61.6	60.0	58.0	52.1	67.9
			Front-Right	53.7	59.5	59.6	62.2	63.2	60.9	59.5	53.6	69.1
			Front	57.4	54.5	58.8	63.5	62.4	61.2	58.5	54.2	69.0
			Front-Left	54.0	55.9	58.3	63.9	62.2	60.6	58.2	52.8	68.7
			Left	55.2	57.1	60.9	63.4	61.4	60.7	61.2	54.0	69.3
			Back-Left	52.3	59.1	59.8	61.4	61.9	61.1	62.0	53.9	69.0
			Back	56.6	53.9	57.5	61.2	59.6	59.8	58.4	48.7	67.2
			Back-Right	51.2	52.0	58.0	62.5	61.5	60.9	58.2	50.4	67.9
			8-pos. log avg.	54.4	56.6	59.1	62.7	61.8	60.7	59.5	52.8	68.6

				Sound Pressure Levels dB(A)								
Load	Distance, m (ft)	Enclosure	Measurement Position	Right	Front-Right	Front	Front-Left	Left	Back-Left	Back	Back-Right	8-pos. log avg.
100% Load	7 (23)	Weather	Overall Levels	76.4	76.2	77.0	79.2	82.8	79.0	75.6	78.3	78.7

				Sound Pressure Levels dB(A)								
				Octave Band Center Frequency (Hz)								Overall Level
Load	Distance, m (ft)		Measurement Position	63	125	250	500	1000	2000	4000	8000	
100% Load	7 (23)	Open Unit, Isolated Exhaust	Right	60.0	59.6	66.1	71.4	71.7	72.8	70.9	61.6	78.3
			Front-Right	54.1	54.9	68.5	71.7	73.8	69.6	69.0	61.3	78.1
			Front	57.3	58.8	71.2	72.2	72.1	73.0	69.2	61.6	78.9
			Front-Left	62.3	63.3	74.2	72.2	74.4	75.3	72.2	65.5	81.1
			Left	69.0	68.2	73.2	76.8	80.9	77.5	73.7	67.0	84.7
			Back-Left	56.8	60.7	69.9	73.9	74.3	75.5	73.1	66.9	80.9
			Back	59.5	60.0	70.6	71.3	71.9	69.4	66.2	59.2	77.5
			Back-Right	53.9	59.9	70.9	73.0	73.7	74.9	71.6	61.2	80.2
			8-pos. log avg.	62.1	62.4	71.2	73.2	75.3	74.3	71.3	63.9	80.6

			Sound Pressure Levels dB(A)								
			Octave Band Center Frequency (Hz)								Overall Level
Load	Distance, m (ft)	Exhaust	63	125	250	500	1000	2000	4000	8000	
100% Load	1 (3.3)	Raw Exhaust (No Silencer)	80.7	99.7	87.8	98.7	101.6	100.2	99.8	96.2	107.5

60REOZJD	60Hz

Load	Distance, m (ft)	Enclosure	Measurement Position	Sound Pressure Levels dB(A)								
				Octave Band Center Frequency (Hz)								Overall Level
				63	125	250	500	1000	2000	4000	8000	
No Load	7 (23)	Sound	Right	45.9	53.1	56.0	60.1	60.1	58.4	54.4	45.5	65.7
			Front-Right	47.8	52.6	54.4	59.6	61.4	59.1	52.8	43.6	65.8
			Front	50.7	48.8	54.7	60.8	60.7	58.2	52.1	42.0	65.7
			Front-Left	47.4	48.3	54.3	60.7	60.6	58.1	51.9	42.1	65.5
			Left	49.2	50.1	55.0	60.3	59.0	57.4	53.3	44.2	65.0
			Back-Left	49.7	50.5	55.5	58.7	59.7	58.4	53.0	42.4	65.0
			Back	52.9	48.9	53.3	58.9	57.3	57.5	52.3	39.2	64.0
			Back-Right	48.7	51.0	55.7	59.8	59.8	59.2	52.7	41.5	65.5
			8-pos. log avg.	49.5	50.7	54.9	59.9	60.0	58.3	52.9	42.9	65.3

Load	Distance, m (ft.)	Enclosure	Measurement Position	Sound Pressure Levels dB(A)								
				Right	Front-Right	Front	Front-Left	Left	Back-Left	Back	Back-Right	8-pos. log avg.
No Load	7 (23)	Weather	Overall Levels	77.4	76.0	77.5	78.5	78.8	77.4	74.1	77.6	77.4

Load	Distance, m (ft.)		Measurement Position	Sound Pressure Levels dB(A)								
				Octave Band Center Frequency (Hz)								Overall Level
				63	125	250	500	1000	2000	4000	8000	
No Load	7 (23)	Open Unit, Isolated Exhaust	Right	52.0	56.6	65.3	72.1	72.1	74.8	72.5	62.3	79.3
			Front-Right	40.9	53.9	66.4	71.1	73.4	71.2	68.7	60.5	77.9
			Front	48.2	57.1	70.6	72.4	72.4	74.2	70.8	61.5	79.4
			Front-Left	55.6	57.5	73.6	72.5	72.5	74.9	72.5	63.9	80.4
			Left	57.1	59.1	68.9	73.0	73.8	75.7	73.6	65.8	80.7
			Back-Left	46.1	56.5	66.0	72.6	71.9	74.4	71.9	64.2	79.3
			Back	49.1	57.9	67.6	70.2	70.7	68.9	65.0	54.9	76.0
			Back-Right	46.2	55.6	68.9	71.8	72.6	75.3	71.2	60.8	79.5
			8-pos. log avg.	52.0	57.0	69.3	72.0	72.5	74.1	71.4	62.6	79.3

Load	Distance, m (ft.)	Exhaust	Sound Pressure Levels dB(A)								
			Octave Band Center Frequency (Hz)								Overall Level
			63	125	250	500	1000	2000	4000	8000	
No Load	1 (3.3)	Raw Exhaust (No Silencer)	67.6	81.7	79.1	86.6	89.1	89.1	87.9	82.0	95.0

KOHLER POWER SYSTEMS

Emissions Data

KOHLER POWER SYSTEMS

60REOZJD

60 HZ. DIESEL INDUSTRIAL GENERATOR SET EMISSION DATA SHEET

ENGINE INFORMATION

Model:	John Deere, 5030HF285G	Bore:	86mm (3.39 in.)
Nameplate BHP @ 1800 RPM:	96	Stroke:	105mm (4.13 in.)
Type:	4-Cycle, 5 Cylinder, Inline	Displacement:	3.0 L (186 cu. in.)
Aspiration:	Turbocharged		
Compression Ratio	18.2:1	EPA Family:	EJDXL04.5141
		EPA Certificate:	EJDXL04.5141-011

Table 1

PERFORMANCE DATA:	1/4 Standby	1/2 Standby	3/4 Standby	Full Standby
Engine bkW @ Stated Load	18.00	36.00	54.00	72.00
Fuel Consumption (g/kWh)	235.60	227.70	226.30	224.80
Exhaust Gas Flow (m^3/min)				13.80
Exhaust Temperature (°C)				524.00

Table 2

EXHAUST EMISSION DATA:	EPA CERTIFICATE DATA
HC (Total Unburned Hydrocarbons)	0.2
NOx (Oxides of Nitrogen as NO2)	4.2
CO (Carbon Monoxide)	0.6
PM (Particular Matter)	0.22

Values are in g/kWh unless otherwise noted

TEST METHODS AND CONDITIONS

The EPA Certificate Data in Table 2 is a weighted average value per ISO 8528 D2.

Data and specifications subject to change without notice

For further information, please contact Todd Loes at John Deere Power Systems, 319-292-6050

	UNITED STATES ENVIRONMENTAL PROTECTION AGENCY **2014 MODEL YEAR** **CERTIFICATE OF CONFORMITY** **WITH THE CLEAN AIR ACT OF 1990**	**OFFICE OF TRANSPORTATION** **AND AIR QUALITY** **ANN ARBOR, MICHIGAN 48105**

Certificate Issued To: Deere & Company (U.S. Manufacturer or Importer) **Certificate Number: EJDXL04.5141-011**	**Effective Date:** **09/10/2013** **Expiration Date:** **12/31/2014**	**Byron J. Bunker, Division Director** **Compliance Division**	**Issue Date:** **09/10/2013** **Revision Date:** **N/A**

Model Year: 2014 **Manufacturer Type:** Original Engine Manufacturer **Engine Family:** EJDXL04.5141	**Mobile/Stationary Indicator:** Stationary **Emissions Power Category:** 56<=kW<75 **Fuel Type:** Diesel **After Treatment Devices:** No After Treatment Devices Installed **Non-after Treatment Devices:** Non-standard Non-After Treatment Device Installed, Smoke Puff Limiter, Engine Design Modification

Pursuant to Section 111 and Section 213 of the Clean Air Act (42 U.S.C. sections 7411 and 7547) and 40 CFR Part 60, and subject to the terms and conditions prescribed in those provisions, this certificate of conformity is hereby issued with respect to the test engines which have been found to conform to applicable requirements and which represent the following engines, by engine family, more fully described in the documentation required by 40 CFR Part 60 and produced in the stated model year.

This certificate of conformity covers only those new compression-ignition engines which conform in all material respects to the design specifications that applied to those engines described in the documentation required by 40 CFR Part 60 and which are produced during the model year stated on this certificate of the said manufacturer, as defined in 40 CFR Part 60.

It is a term of this certificate that the manufacturer shall consent to all inspections described in 40 CFR 1068 and authorized in a warrant or court order. Failure to comply with the requirements of such a warrant or court order may lead to revocation or suspension of this certificate for reasons specified in 40 CFR Part 60. It is also a term of this certificate that this certificate may be revoked or suspended or rendered void *ab initio* for other reasons specified in 40 CFR Part 60.

This certificate does not cover engines sold, offered for sale, or introduced, or delivered for introduction, into commerce in the U.S. prior to the effective date of the certificate.

KOHLER POWER SYSTEMS

Dimensional Drawings

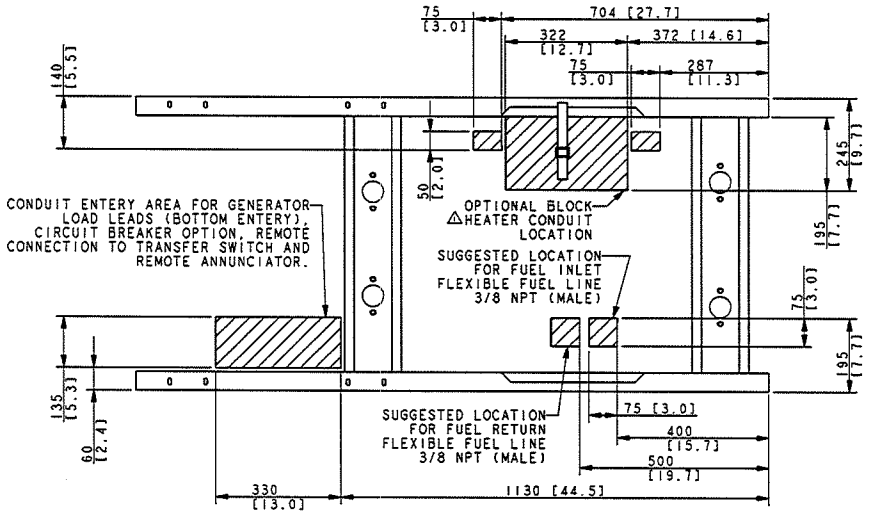

MODEL	COB	GENSET WEIGHT (WET)
60 4P7BX	1112 [43.80]	756 [1667]
60 4P10X/4Q10X	1082 [42.60]	809 [1785]
60 4P8X	1093 [43.00]	770 [1697]

INSTALLATION NOTE

IF SUBBASE FUEL TANK AND/OR SOUND HOUSING IS USED, REFER TO SUBBASE FUEL TANK ADV TO DETERMINE MOUNTING LOCATIONS.

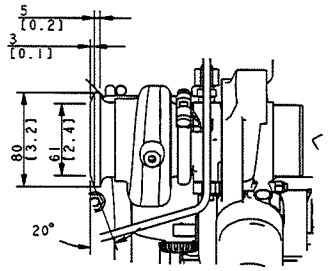

DETAIL A
ENGINE EXHAUST & OUTLET

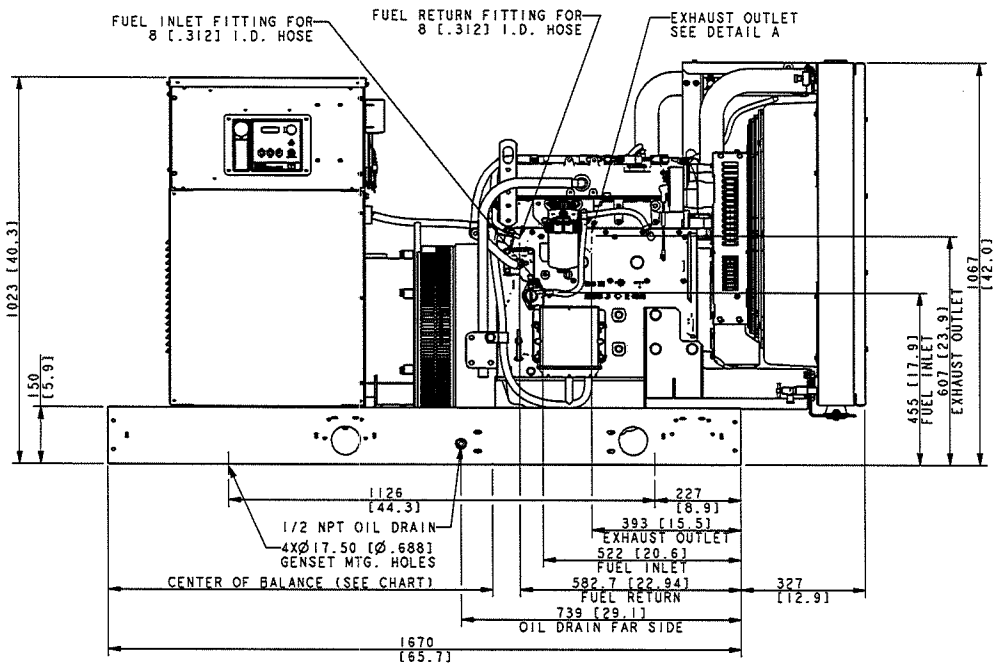

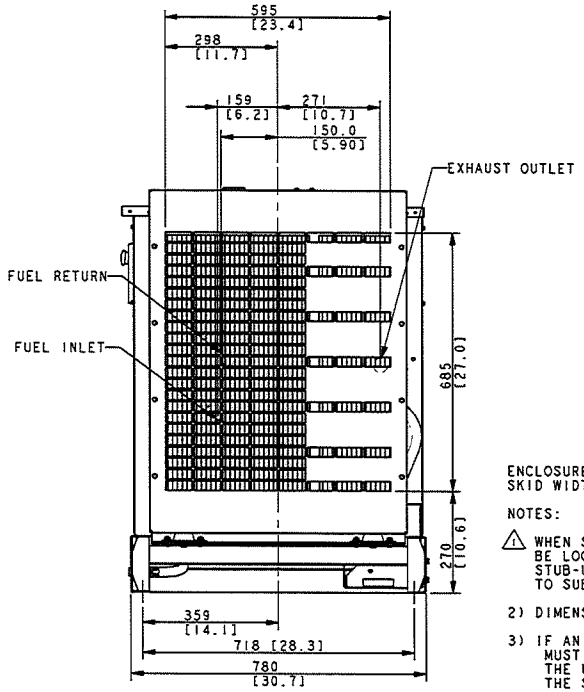

ENCLOSURE AVAILABLE WITH 1041 [41 INCH] SKID WIDTH ONLY.

NOTES:

1. WHEN SUBBASE TANK IS USED. CONDUIT MUST BE LOCATED OUTSIDE OF TANK AREA OR IN STUB-UP AREA FOR SUBBASE TANK. REFER TO SUBBASE ADV.
2. DIMENSIONS IN [ ] ARE ENGLISH EQUIVALENTS.
3. IF AN ENCLOSURE IS USED THE FUEL LINE MUST BE STUBBED UP FROM DIRECTLY UNDER THE UNIT OR BROUGHT IN FROM THE END OF THE SKID. REFER TO ENCLOSURE ADV.

60 MODEL, 60Hz, 4P7BX /4P8X/4P10X/ 4Q10X
RECONNECTABLE
IMPROVED MOTOR STARTING (IMS) RECON. & 600V ALTERNATORS
JOHN DEERE 4024HF, TIER III

REV	DATE	ON COMPOSITE DWGS, SEE PART NO. FOR REVISION LEVEL	BY
-	11-30-10	NEW DRAWING [90336-5]	KMP
A	7-14-14	(D-6) 4P10X AND 4P8X ADDED [CT86848]	SAM

UNLESS OTHERWISE SPECIFIED: 1) DIMENSIONS ARE IN MILLIMETERS 2) TOLERANCES ARE: X.XX ± X.X ± ANGLES ± 0° 30' SURFACE FINISH MAX. THIRD ANGLE PROJECTION

APPROVALS		DATE
DRAWN	KMP	11-30-10
CHECKED	KDW	11-30-10
APPROVED	GDF	11-30-10

KOHLER CO. METRIC | PRO-E
POWER SYSTEMS, KOHLER, WI 53044 U.S.A.
THIS DRAWING IN DESIGN AND DETAIL IS KOHLER CO. PROPERTY AND MUST NOT BE USED EXCEPT IN CONNECTION WITH KOHLER CO. WORK. ALL RIGHTS OF DESIGN OR INVENTION ARE RESERVED.

TITLE **DIMENSION PRINT**

SCALE 0.16 | CAD NO. | SHEET 1 of 2
DWG NO. **ADV-7973** | D

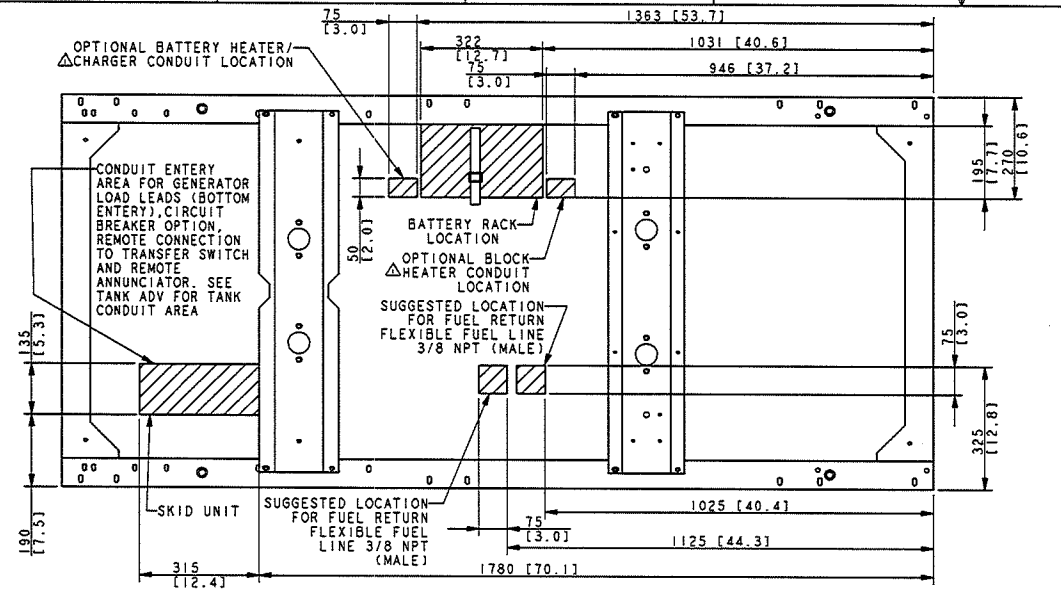

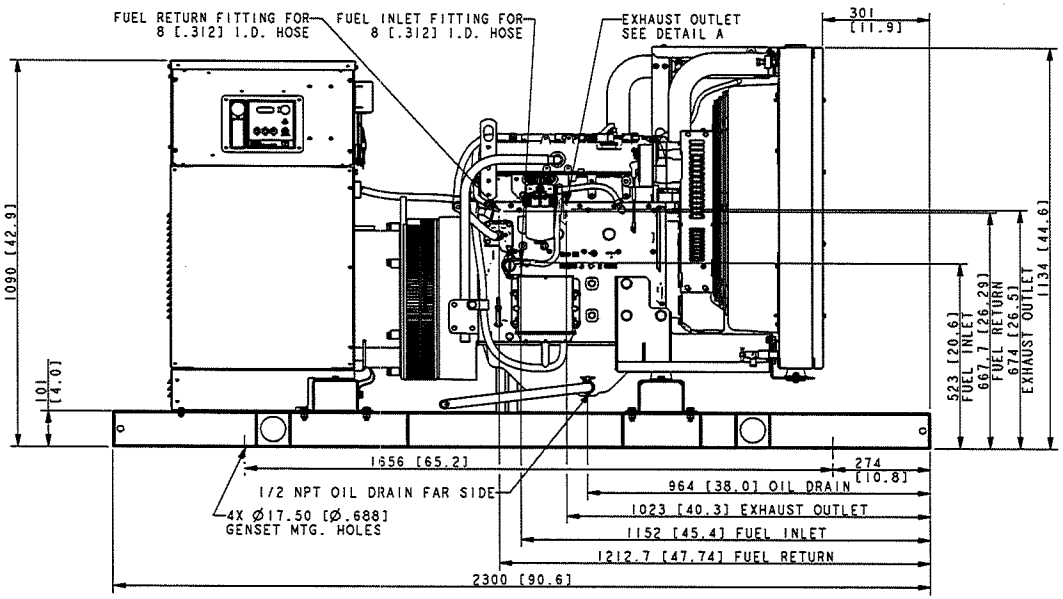

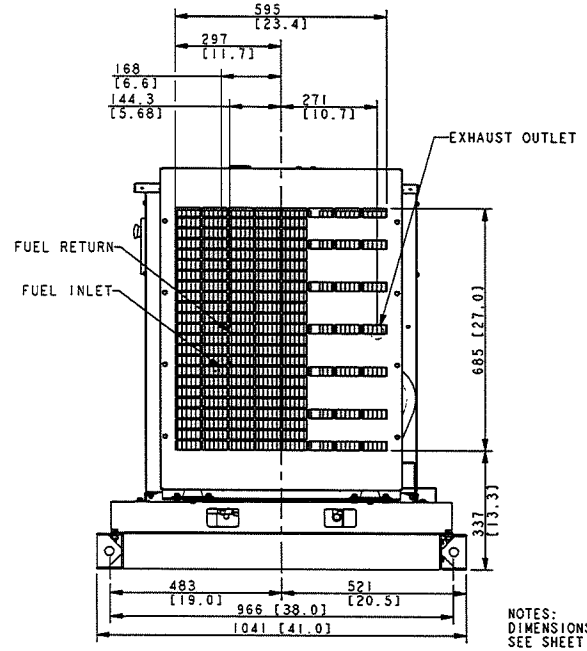

NOTES:
DIMENSIONS IN [ ] ARE ENGLISH EQUIVALENTS.
SEE SHEET 1 FOR GENSET WEIGHTS.

60 MODEL, 60Hz, 4P7BX/4P8X/4P10X / 4Q10X
RECONNECTABLE
IMPROVED MOTOR STARTING (IMS) RECON. & 600V ALTERNATORS
JOHN DEERE 4024HF, TIER III

REV	DATE	ON COMPOSITE DWGS. SEE PART NO. FOR REVISION LEVEL	BY
-	12-2-10	NEW DRAWING [90336-5]	KMP
A	7-14-14	SEE SHEET 1 [CT86848]	SAM

UNLESS OTHERWISE SPECIFIED - (1) DIMENSIONS ARE IN MILLIMETERS (2) TOLERANCES ARE:
X.XX ±
X.X ±
X ±
ANGLES ± 0° 30'
SURFACE FINISH 125 MAX.
THIRD ANGLE PROJECTION

APPROVALS		DATE
DRAWN	KMP	12-2-10
CHECKED	KDW	12-2-10
APPROVALS	GDF	12-2-10

KOHLER CO. METRIC PRO-E
POWER SYSTEMS, KOHLER, WI 53044 U.S.A.
THIS DRAWING IN DESIGN AND DETAIL IS KOHLER CO. PROPERTY AND MUST NOT BE USED EXCEPT IN CONNECTION WITH KOHLER CO. WORK. ALL RIGHTS OF DESIGN OR INVENTION ARE RESERVED.
TITLE DIMENSION PRINT
SCALE 0.15 | CAD NO. | SHEET 2 of 2
DWG NO. ADV-7973 | D

KOHLER CO. CONFIDENTIAL INFORMATION

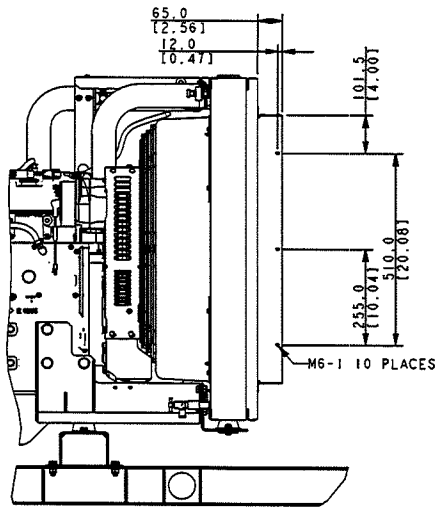

RADIATOR DUCT FLANGE

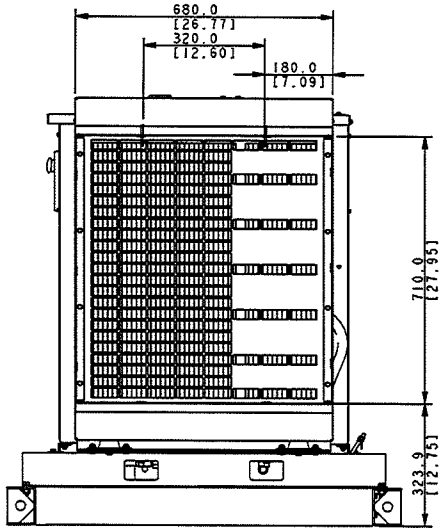

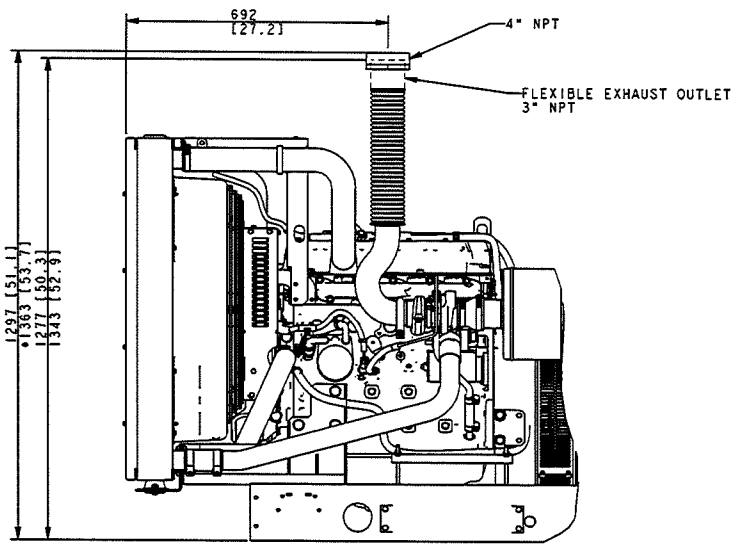

FLEXIBLE EXHAUST

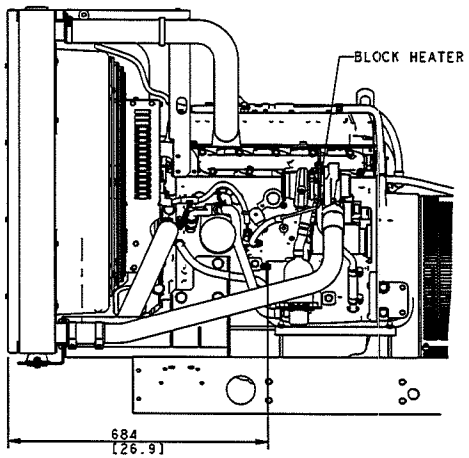

BLOCK HEATER
120 AND 240 VOLT

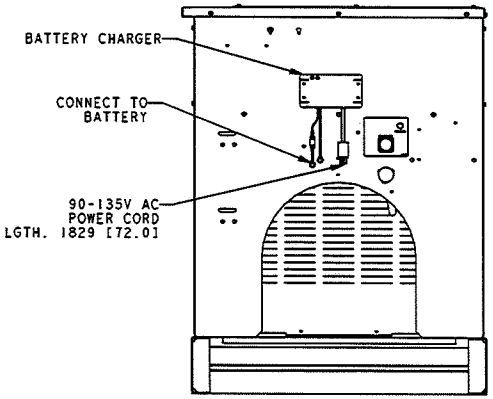

BATTERY CHARGER

*-ASTERISK DENOTES 1041 [41.0 IN.] SKID WIDTH

NOTE: DIMENSIONS IN [ ] ARE ENGLISH EQUIVALENT

60 MODEL, 60Hz, 4P7BX
RECONNECTABLE
IMPROVED MOTOR STARTING (IMS) RECON. & 600V ALTERNATORS
JOHN DEERE 3050HF, TIER III

REV	DATE	ON COMPOSITE DWGS. SEE PART NO. FOR REVISION LEVEL	BY
-	2-10-11	NEW DRAWING [90336-5]	KMP

UNLESS OTHERWISE SPECIFIED:
1) DIMENSIONS ARE IN MILLIMETERS
2) TOLERANCES ARE:
X.XX ± 0.25
X.X ± 1.0
X ± 1.5
ANGLES ± 0° 30'
SURFACE FINISH 125 MAX.
THIRD ANGLE PROJECTION

APPROVALS		DATE
DRAWN	KMP	2-10-11
CHECKED	KDW	2-10-11
APPROVED	GDF	2-10-11

KOHLER CO. METRIC | PRO-E
POWER SYSTEMS. KOHLER, WI 53044 U.S.A.
THIS DRAWING IN DESIGN AND DETAIL IS KOHLER CO. PROPERTY AND MUST NOT BE USED EXCEPT IN CONNECTION WITH KOHLER CO. WORK. ALL RIGHTS OF DESIGN OR INVENTION ARE RESERVED.

TITLE: DIMENSION PRINT
SCALE 0.15 | CAD NO. | SHEET 1 of 1
DWG NO. ADV-7984 | D

PRODUCTION RELEASED – UNCONTROLLED WHEN PRINTED

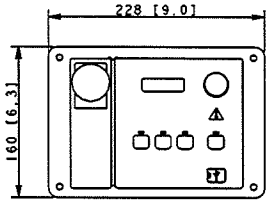

DEC 3000

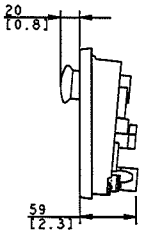

DIMENSIONS IN [ ] ARE ENGLISH EQUIVALENTS.

REV	DATE	ON COMPOSITE DWGS, SEE PART NO. FOR REVISION LEVEL	BY
-	10-15-10	NEW DRAWING [90099]	DJV

UNLESS OTHERWISE SPECIFIED - 1) DIMENSIONS ARE IN MILLIMETERS 2) TOLERANCES ARE:
X.XX ±
X.X ±
X ±
ANGLES ±

SURFACE FINISH MAX.

THIRD ANGLE PROJECTION

APPROVALS		DATE
DRAWN	DJV	10-15-10
CHECKED	DJV	10-15-10
APPROVED	JDZ	10-15-10

KOHLER CO. METRIC | PRO-E

POWER SYSTEMS, KOHLER, WI 53044 U.S.A.

THIS DRAWING IN DESIGN AND DETAIL IS KOHLER CO. PROPERTY AND MUST NOT BE USED EXCEPT IN CONNECTION WITH KOHLER CO. WORK. ALL RIGHTS OF DESIGN OR INVENTION ARE RESERVED.

TITLE: DIMENSION PRINT, CONTROLLER

SCALE 0.40 | CAD NO. | SHEET 1 of 1

DWG NO. ADV-7935 | D

20-300KW CONTROLLER

MODEL	ENCLOSURE WEIGHT KG [LBS]
STEEL WEATHER	261[575]
STEEL SOUND	272[600]
ALUMINIUM SOUND	170[375]

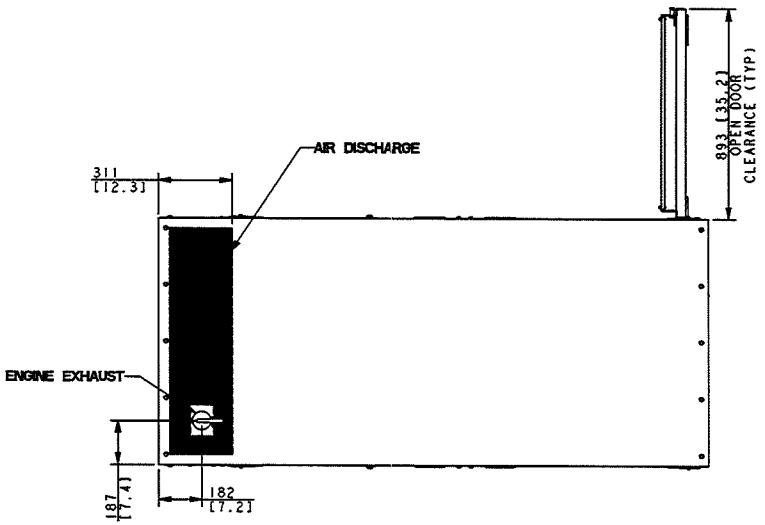

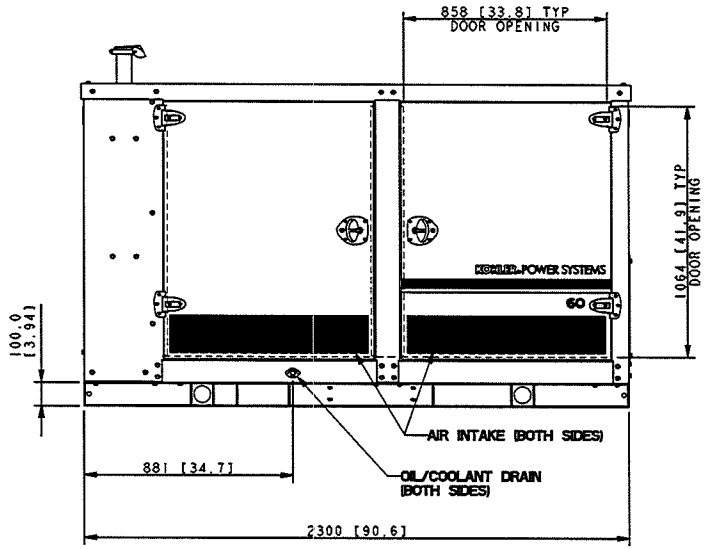

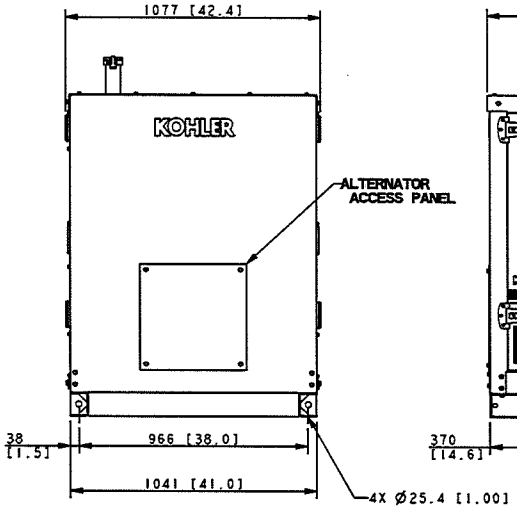

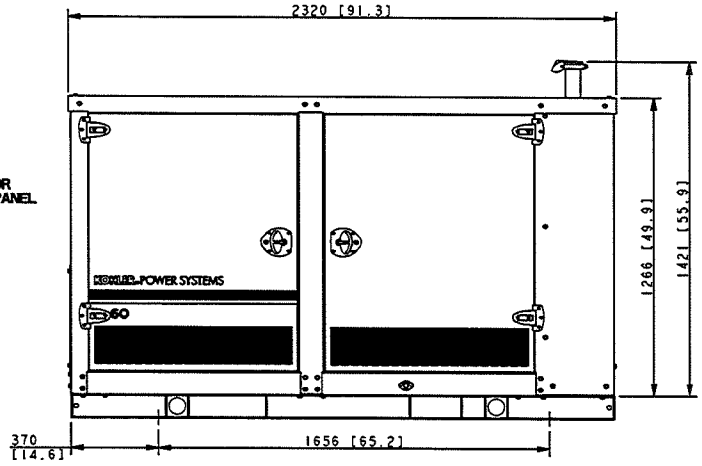

NOTE:

1. IF TANK IS ORDERED, ENCLOSURE MOUNTS DIRECTLY TO TANK
2. TANK MAY EXTEND BEYOND ENCLOSURE (DISCHARGE END ONLY)

DIMENSIONS IN [] ARE IN ENGLISH EQUIVALENTS.

20 MODEL, 60HZ, 4P4
30MODEL, 60 HZ, 4P5/4P7/4Q4
40 MODEL, 60 HZ, 4P5
50 MODEL, 60 HZ, 4P7/4P8/4Q10/4P7BX/4P10X/4Q10X
60 MODEL, 60 HZ, 4P8/4P10/4V7/4P7BX/4P10X/4Q10X
RECONNECTABLE,
IMPROVED MOTOR STARTING (IMS) RECON. & 600V ALTERNATORS
JOHN DEERE, 4024TF/4024 HF/5030HF, TIER III

REV	DATE	ON COMPOSITE DWGS, SEE PART NO. FOR REVISION LEVEL	BY
B	11-10-08	(D-4) MODEL 4Q7 ADDED, 240 GAL WAS 200, METRIC CONVERSIONS CORRECTED [86220]	SAM
C	2-24-09	ALL VIEWS UPDATED AND REDIMENSIONED. [86807]	GFR
D	6-1-09	(D-8) 311 WAS 312 (B-1) 1416 WAS 1293 [87272]	SAM
E	3-9-10	(A-8) 100 WAS 'A', (D-2) TABLE REMOVED, (D-2) NEW TABLE ADDED,(B-4) DIMENSIONS FOR ACCESS PANEL REMOVED[89197]	PKD
F	12-20-11	(A-4) 4P78X/4P10X/4Q10X ADDED TO 50 & 60 MODEL [92681]	PKD

UNLESS OTHERWISE SPECIFIED - 1) DIMENSIONS ARE IN MILLIMETERS 2) TOLERANCES ARE:

SURFACE FINISH 125 MAX.

THIRD ANGLE PROJECTION

APPROVALS		DATE
DRAWN	JMH	3-5-08
CHECKED	CWF	3-5-08
APPROVED	RJD	3-5-08

KOHLER CO. | METRIC | PRO-E

POWER SYSTEMS, KOHLER, WI 53044 U.S.A.

THIS DRAWING IN DESIGN AND DETAIL IS KOHLER CO. PROPERTY AND MUST NOT BE USED EXCEPT IN CONNECTION WITH KOHLER CO. WORK. ALL RIGHTS OF DESIGN OR INVENTION ARE RESERVED.

TITLE: DIMENSION PRINT
20 - 60 KW JD

SCALE 0.100 | CAD NO. | SHEET 1 of 1

DWG NO. ADV-7429 | D

MODEL	CAPACITY		WEIGHT		HEIGHT	
	LITERS	GAL	Kg	LBS	MM	IN
20/30KW	294	78	223	492	305	12.0
20-50KW	425	112	257	567	406	16.0
60KW	490	130	274	604	457	18.0
20-50KW	621	164	308	679	559	22.0
20-60KW	784	207	350	772	686	27.0
40-60KW	948	250	392	863	813	32.0

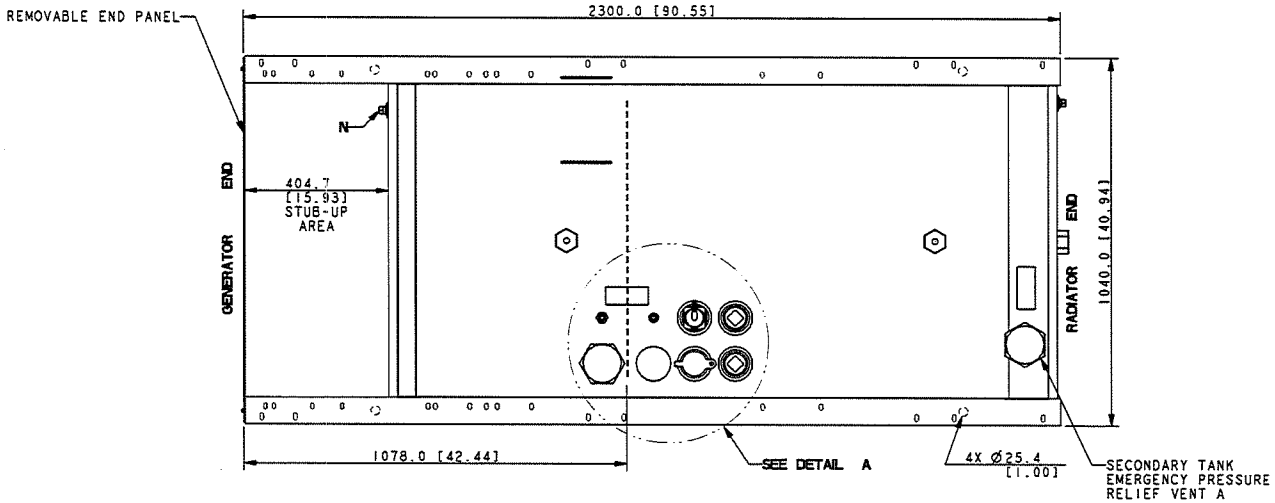

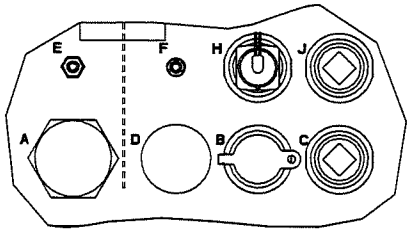

DETAIL A
SCALE 0.30

TANK FITTINGS:

A. 3" NPT EMERGENCY VENT FITTING PER NFPA 30 WITH VENT CAPS (QTY 2).
B. 2" NPT FUEL FILL FITTING WITH LOCKABLE CAP AND 2" RISER.
C. 2" NPT ADDITIONAL FITTING FOR OPTIONAL ACCESSORY (INSTALL STEEL 2" NPT PIPE PLUG).
D. 2" NPT NORMAL VENT FITTING WITH MUSHROOM VENT CAP AND 5" RISER.
E. 1/2" NPT FITTING FOR REMOVABLE ENGINE SUPPLY DIP TUBE (3/8" NPT FEMALE WITH CHECK VALVE).
F. 1/2" NPT FITTING FOR REMOVABLE FUEL RETURN DIP TUBE (3/8" NPT FEMALE).
H. 2" NPT FUEL LEVEL GAUGE W/ SENDER.
J. 2" NPT ADDITIONAL FITTING FOR OPTIONAL ACCESSORY (INSTALL STEEL 2" NPT PIPE PLUG).
M. 1/2" NPT BASIN DRAIN (INSTALL STEEL 1/2" NPT PIPE PLUG).
N. 1/2" NPT FOR FUEL IN BASIN SWITCH (INSTALL STEEL 1/2" NPT PIPE PLUG).

* FITTING DESIGNATIONS TO CHANGE WITHOUT NOTIFICATION

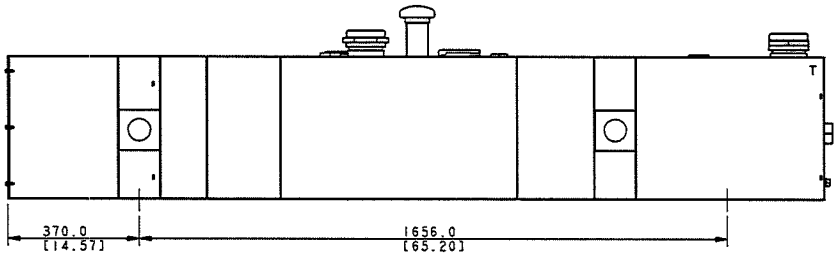

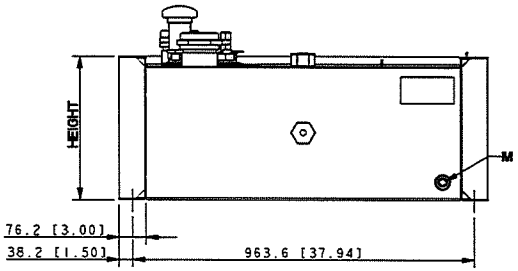

NOTE:
FOR FURTHER TANK DETAIL
SEE INDIVIDUAL DRAWINGS.

20 MODEL, 60HZ, 4P4
30 MODEL, 60HZ, 4P5/4P7/4Q4
40 MODEL, 60HZ, 4P5
50 MODEL, 60HZ, 4P7/4P8/4Q10/4P7BX/4P10X/4Q10X
60 MODEL, 60HZ, 4P8/4P10/4V7/4P7BX/4P10X/4Q10X
RECONNECTABLE
IMPROVED MOTOR STARTING (IMS) RECONN. & 600V ALTERNATORS
JOHN DEERE 4024TF/4024HF/5030HF, TIER III

REV	DATE	ON COMPOSITE DWGS, SEE PART NO. FOR REVISION LEVEL	BY
-	8-14-12	NEW DRAWING [CT20906]	JBZ

UNLESS OTHERWISE SPECIFIED:
(1) DIMENSIONS ARE IN MILLIMETERS
(2) TOLERANCES ARE:
X.XX ± 0.25
X.X ± 1.0
X ± 1.5
ANGLES ± 0° 30'
SURFACE FINISH MAX.
THIRD ANGLE PROJECTION

APPROVALS		DATE
DRAWN	JBZ	8-14-12
CHECKED	JBZ	8-14-12
APPROVED	AJD	8-14-12

KOHLER CO. METRIC | PRO-E
POWER SYSTEMS. KOHLER, WI 53044 U.S.A.

THIS DRAWING IN DESIGN AND DETAIL IS KOHLER CO. PROPERTY AND MUST NOT BE USED EXCEPT IN CONNECTION WITH KOHLER CO. WORK. ALL RIGHTS OF DESIGN OR INVENTION ARE RESERVED.

TITLE
DIMENSION PRINT

SCALE 0.15 | CAD NO. | SHEET 1 of 1
DWG NO. ADV-8517 | D

KOHLER POWER SYSTEMS

Wiring Schematics

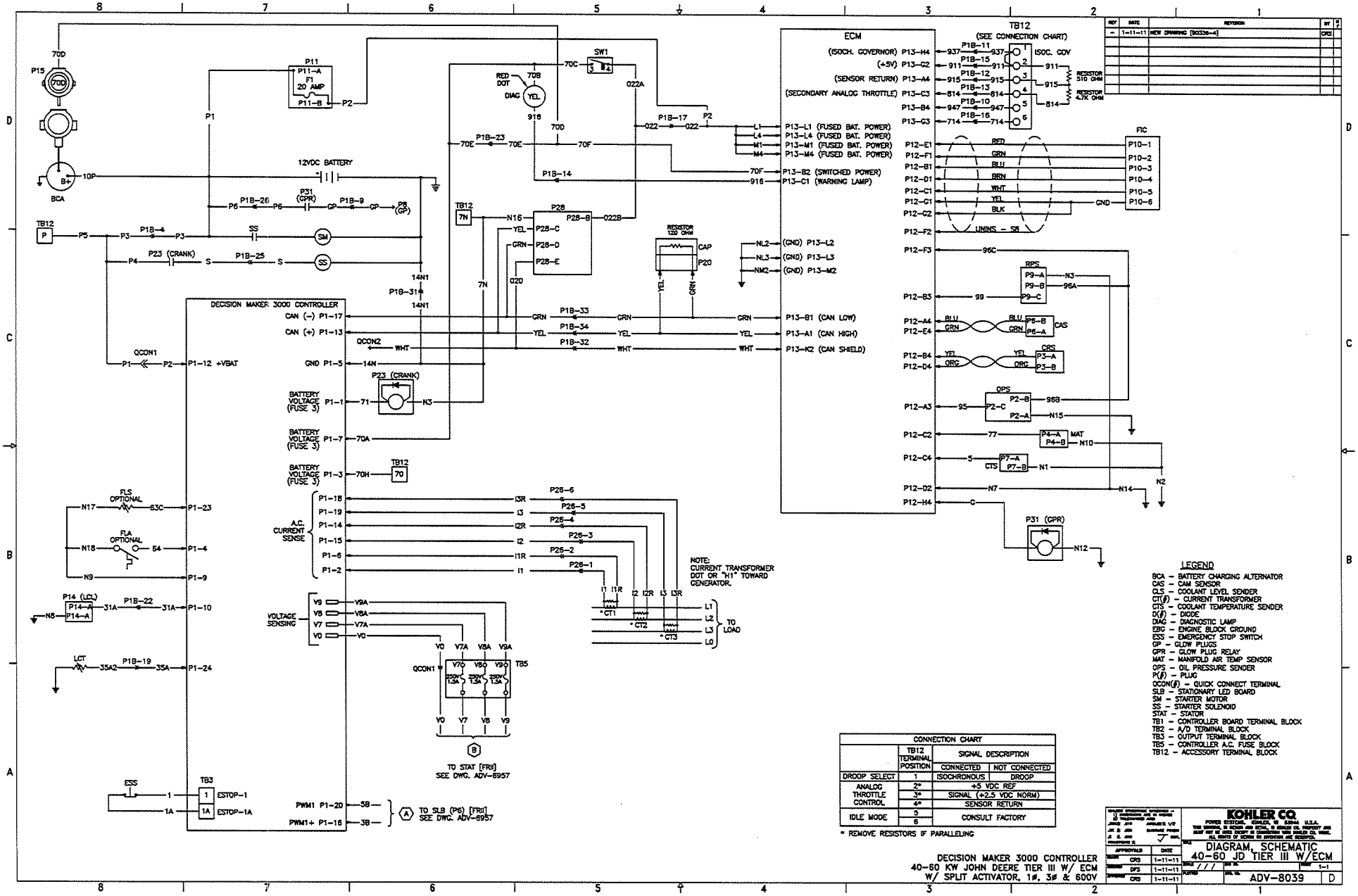

REV	DATE	REVISION	BY
-	1-11-11	NEW DRAWING [90336-4]	CRS

LEGEND

BCA – BATTERY CHARGING ALTERNATOR
CAS – CAM SENSOR
CLS – COOLANT LEVEL SENDER
CT(#) – CURRENT TRANSFORMER
CTS – COOLANT TEMPERATURE SENDER
D(#) – DIODE
DIAG – DIAGNOSTIC LAMP
EBG – ENGINE BLOCK GROUND
ESS – EMERGENCY STOP SWITCH
GP – GLOW PLUGS
GPR – GLOW PLUG RELAY
MAT – MANIFOLD AIR TEMP SENSOR
OPS – OIL PRESSURE SENDER
P(#) – PLUG
QCON(#) – QUICK CONNECT TERMINAL
SLB – STATIONARY LED BOARD
SM – STARTER MOTOR
SS – STARTER SOLENOID
STAT – STATOR
TB1 – CONTROLLER BOARD TERMINAL BLOCK
TB2 – A/D TERMINAL BLOCK
TB3 – OUTPUT TERMINAL BLOCK
TB5 – CONTROLLER A.C. FUSE BLOCK
TB12 – ACCESSORY TERMINAL BLOCK

CONNECTION CHART			
	TB12 TERMINAL POSITION	SIGNAL DESCRIPTION	
		CONNECTED	NOT CONNECTED
DROOP SELECT	1	ISOCHRONOUS	DROOP
ANALOG THROTTLE CONTROL	2*	+5 VDC REF	
	3*	SIGNAL (+2.5 VDC NORM)	
	4*	SENSOR RETURN	
IDLE MODE	5	CONSULT FACTORY	
	6		

* REMOVE RESISTORS IF PARALLELING

DECISION MAKER 3000 CONTROLLER
40-60 KW JOHN DEERE TIER III W/ ECM
W/ SPLIT ACTIVATOR, 1ø, 3ø & 600V

KOHLER CO.
POWER SYSTEMS, KOHLER, WI 53044 U.S.A.

APPROVALS		DATE
DRAWN	CRS	1-11-11
CHECKED	DFS	1-11-11
APPROVED	CRS	1-11-11

TITLE: DIAGRAM, SCHEMATIC 40-60 JD TIER III W/ECM
SCALE: / / /
SHEET: 1-1
DWG. NO. ADV-8039
REV: D

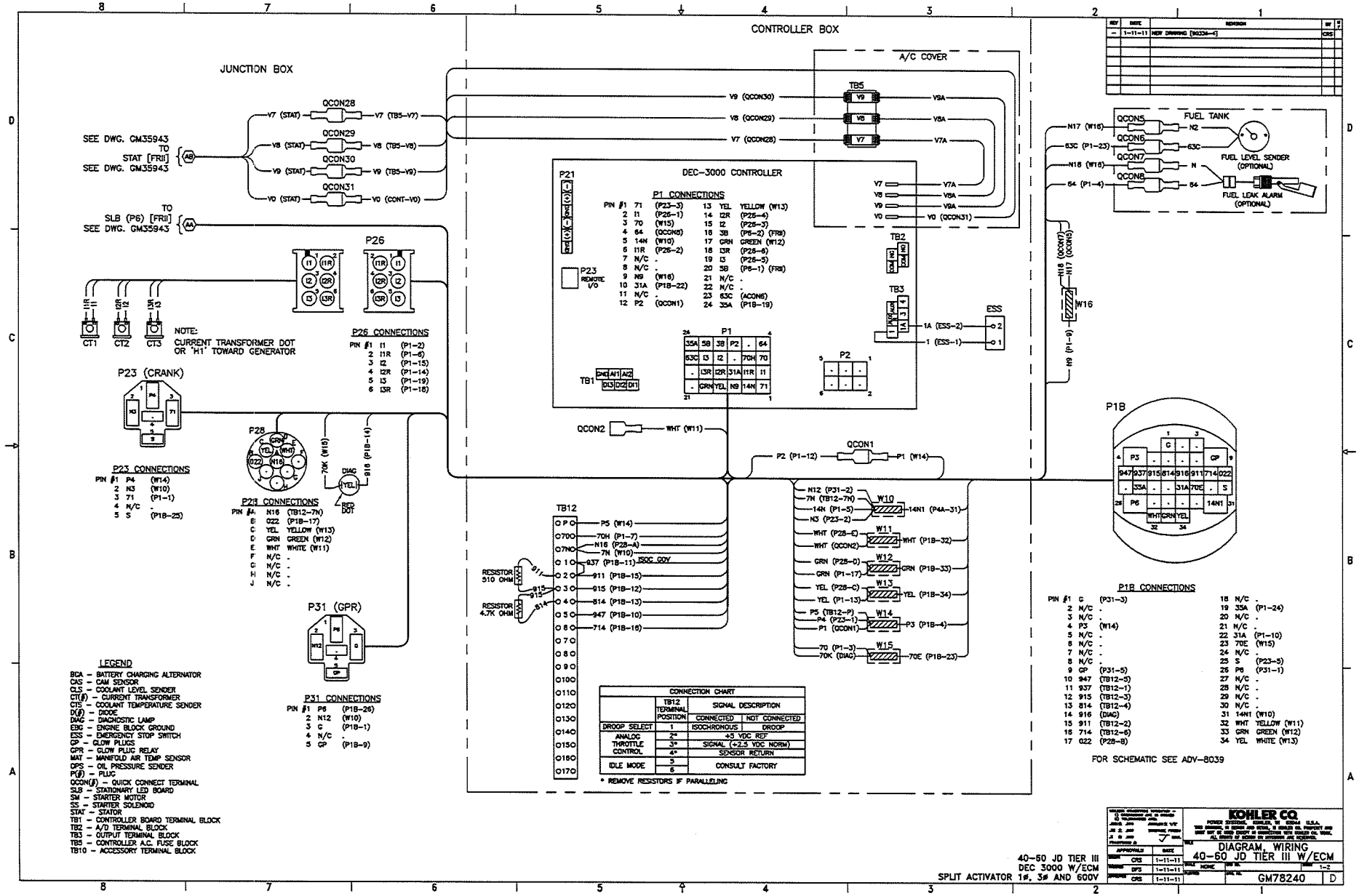

CONTROLLER BOX
JUNCTION BOX
A/C COVER
DEC-3000 CONTROLLER
FUEL TANK
FUEL LEVEL SENDER (OPTIONAL)
FUEL LEAK ALARM (OPTIONAL)
SEE DWG. GM35943 TO STAT [FRII] SEE DWG. GM35943
TO SLB (P6) [FRII] SEE DWG. GM35943
NOTE: CURRENT TRANSFORMER DOT OR 'H1' TOWARD GENERATOR
P23 (CRANK)
P26 CONNECTIONS
P23 CONNECTIONS
P28 CONNECTIONS
P31 (GPR)
P31 CONNECTIONS
P1 CONNECTIONS
P1B CONNECTIONS
FOR SCHEMATIC SEE ADV-8039
LEGEND
BCA – BATTERY CHARGING ALTERNATOR
CAS – CAM SENSOR
CLS – COOLANT LEVEL SENDER
CT(#) – CURRENT TRANSFORMER
CTS – COOLANT TEMPERATURE SENDER
D(#) – DIODE
DIAG – DIAGNOSTIC LAMP
EBG – ENGINE BLOCK GROUND
ESS – EMERGENCY STOP SWITCH
GP – GLOW PLUGS
GPR – GLOW PLUG RELAY
MAT – MANIFOLD AIR TEMP SENSOR
OPS – OIL PRESSURE SENDER
P(#) – PLUG
QCON(#) – QUICK CONNECT TERMINAL
SLB – STATIONARY LED BOARD
SM – STARTER MOTOR
SS – STARTER SOLENOID
STAT – STATOR
TB1 – CONTROLLER BOARD TERMINAL BLOCK
TB2 – A/D TERMINAL BLOCK
TB3 – OUTPUT TERMINAL BLOCK
TB5 – CONTROLLER A.C. FUSE BLOCK
TB10 – ACCESSORY TERMINAL BLOCK
CONNECTION CHART
* REMOVE RESISTORS IF PARALLELING
40-60 JD TIER III
DEC 3000 W/ECM
SPLIT ACTIVATOR 1ø, 3ø AND 600V
KOHLER CO.
DIAGRAM, WIRING
40-60 JD TIER III W/ECM
GM78240
D

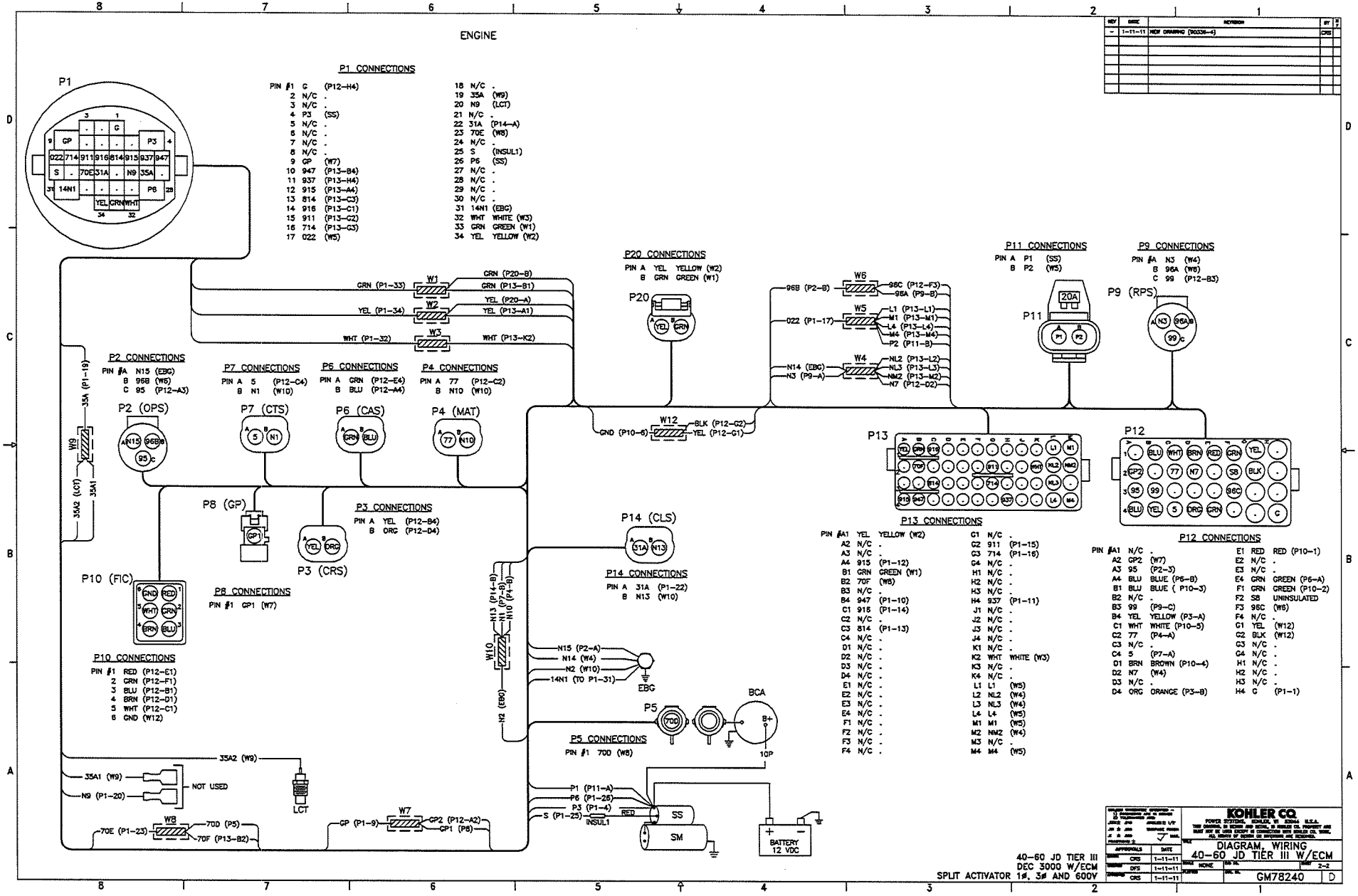
ENGINE
P1
P1 CONNECTIONS
PIN #1 C (P12-H4)
2 N/C .
3 N/C .
4 P3 (SS)
5 N/C .
6 N/C .
7 N/C .
8 N/C .
9 GP (W7)
10 947 (P13-B4)
11 937 (P13-H4)
12 915 (P13-A4)
13 814 (P13-C3)
14 916 (P13-C1)
15 911 (P13-G2)
16 714 (P13-G3)
17 022 (W5)
18 N/C .
19 35A (W9)
20 N9 (LCT)
21 N/C .
22 31A (P14-A)
23 70E (W8)
24 N/C .
25 S (INSUL1)
26 P6 (SS)
27 N/C .
28 N/C .
29 N/C .
30 N/C .
31 14N1 (EBG)
32 WHT WHITE (W3)
33 GRN GREEN (W1)
34 YEL YELLOW (W2)
P20 CONNECTIONS
PIN A YEL YELLOW (W2)
B GRN GREEN (W1)
P20
P11 CONNECTIONS
PIN A P1 (SS)
B P2 (W5)
P11
20A
P9 CONNECTIONS
PIN #A N3 (W4)
B 96A (W6)
C 99 (P12-B3)
P9 (RPS)
W1
W2
W3
W4
W5
W6
W12
GRN (P1-33)
GRN (P20-B)
GRN (P13-B1)
YEL (P1-34)
YEL (P20-A)
YEL (P13-A1)
WHT (P1-32)
WHT (P13-K2)
96B (P2-B)
96C (P12-F3)
96A (P9-B)
022 (P1-17)
L1 (P13-L1)
M1 (P13-M1)
L4 (P13-L4)
M4 (P13-M4)
P2 (P11-B)
N14 (EBG)
N3 (P9-A)
NL2 (P13-L2)
NL3 (P13-L3)
NM2 (P13-M2)
N7 (P12-D2)
GND (P10-6)
BLK (P12-C2)
YEL (P12-G1)
P2 CONNECTIONS
PIN #A N15 (EBG)
B 96B (W6)
C 95 (P12-A3)
P2 (OPS)
P7 CONNECTIONS
PIN A 5 (P12-C4)
B N1 (W10)
P7 (CTS)
P6 CONNECTIONS
PIN A GRN (P12-E4)
B BLU (P12-A4)
P6 (CAS)
P4 CONNECTIONS
PIN A 77 (P12-C2)
B N10 (W10)
P4 (MAT)
35A (P1-19)
W9
35A2 (LCT)
35A1
P8 (GP)
P3 CONNECTIONS
PIN A YEL (P12-B4)
B ORG (P12-D4)
P3 (CRS)
P8 CONNECTIONS
PIN #1 GP1 (W7)
P10 (FIC)
P10 CONNECTIONS
PIN #1 RED (P12-E1)
2 GRN (P12-F1)
3 BLU (P12-B1)
4 BRN (P12-D1)
5 WHT (P12-C1)
6 GND (W12)
P14 (CLS)
P14 CONNECTIONS
PIN A 31A (P1-22)
B N13 (W10)
P13
P13 CONNECTIONS
PIN #A1 YEL YELLOW (W2)
A2 N/C .
A3 N/C .
A4 915 (P1-12)
B1 GRN GREEN (W1)
B2 70F (W8)
B3 N/C .
B4 947 (P1-10)
C1 916 (P1-14)
C2 N/C .
C3 814 (P1-13)
C4 N/C .
D1 N/C .
D2 N/C .
D3 N/C .
D4 N/C .
E1 N/C .
E2 N/C .
E3 N/C .
E4 N/C .
F1 N/C .
F2 N/C .
F3 N/C .
F4 N/C .
C1 N/C .
G2 911 (P1-15)
G3 714 (P1-16)
G4 N/C .
H1 N/C .
H2 N/C .
H3 N/C .
H4 937 (P1-11)
J1 N/C .
J2 N/C .
J3 N/C .
J4 N/C .
K1 N/C .
K2 WHT WHITE (W3)
K3 N/C .
K4 N/C .
L1 L1 (W5)
L2 NL2 (W4)
L3 NL3 (W4)
L4 L4 (W5)
M1 M1 (W5)
M2 NM2 (W4)
M3 N/C .
M4 M4 (W5)
P12
P12 CONNECTIONS
PIN #A1 N/C .
A2 GP2 (W7)
A3 95 (P2-3)
A4 BLU BLUE (P6-B)
B1 BLU BLUE (P10-3)
B2 N/C .
B3 99 (P9-C)
B4 YEL YELLOW (P3-A)
C1 WHT WHITE (P10-5)
C2 77 (P4-A)
C3 N/C .
C4 5 (P7-A)
D1 BRN BROWN (P10-4)
D2 N7 (W4)
D3 N/C .
D4 ORG ORANGE (P3-B)
E1 RED RED (P10-1)
E2 N/C .
E3 N/C .
E4 GRN GREEN (P6-A)
F1 GRN GREEN (P10-2)
F2 SB UNINSULATED
F3 96C (W6)
F4 N/C .
G1 YEL (W12)
G2 BLK (W12)
G3 N/C .
G4 N/C .
H1 N/C .
H2 N/C .
H3 N/C .
H4 C (P1-1)
W10
N13 (P14-B)
N10 (P4-B)
H2 (EBG)
N15 (P2-A)
N14 (W4)
N2 (W10)
14N1 (TO P1-31)
EBG
P5
P5 CONNECTIONS
PIN #1 70D (W8)
BCA
B+
10P
35A2 (W9)
35A1 (W9)
N9 (P1-20)
NOT USED
LCT
W8
70E (P1-23)
70D (P5)
70F (P13-B2)
W7
GP (P1-9)
CP2 (P12-A2)
CP1 (P6)
P1 (P11-A)
P6 (P1-26)
P3 (P1-4)
S (P1-25)
RED
INSUL1
SS
SM
BATTERY
12 VDC
40-60 JD TIER III
DEC 3000 W/ECM
SPLIT ACTIVATOR 1ø, 3ø AND 600V
KOHLER CO.
DIAGRAM, WIRING
40-60 JD TIER III W/ECM
GM78240
D

REV	DATE	REVISION	BY	P
–	9-16-10	NEW DRAWING [88518-4]	CRS	

P29 2 AMP RELAY OUPUT (2.1) CONNECTIONS
P29–NC 2.1 RELAY NORMALLY CLOSED
P29–COM 2.1 RELAY COMMON
P29–NO 2.1 RELAY NORMALLY OPEN

P30 2 AMP RELAY OUPUT (2.2) CONNECTIONS
P30–NC 2.2 RELAY NORMALLY CLOSED
P30–COM 2.2 RELAY COMMON
P30–NO 2.2 RELAY NORMALLY OPEN

P31 2 AMP RELAY OUPUT (2.3) CONNECTIONS
P31–NC 2.3 RELAY NORMALLY CLOSED
P31–COM 2.3 RELAY COMMON
P31–NO 2.3 RELAY NORMALLY OPEN

P32 10 AMP RELAY OUPUT (2.4 & 2.5) CONNECTIONS
P32–NO 2.4 RELAY NORMALLY OPEN
P32–COM 2.4 RELAY COMMON
P32–NC 2.4 RELAY NORMALLY CLOSED

P32–NO 2.5 RELAY NORMALLY OPEN
P32–COM 2.5 RELAY COMMON
P32–NC 2.5 RELAY NORMALLY CLOSED

P27 CAN TERMINATOR CONNECTIONS
PLACE THE P27 JUMPER ON THE "IN" PINS

P28 SINGLE-ENDED (0–5V) ANALOG INPUT CONNECTIONS
P28–GND AGND ANALOG RETURN
P28–VN2 NO CONNECTION
P28–VP2 ACH2 SIGNAL
P28–+5V SUPPLY (0.05 AMP MAX)
P28–GND AGND ANALOG RETURN
P28–VN1 NO CONNECTION
P28–VP1 ACH1 SIGNAL
P28–+5V SUPPLY (0.05 AMP MAX)

P28 DIFFERENTIAL (+/–5V) ANALOG INPUT CONNECTIONS
P28–GND AGND ANALOG REFERENCE
P28–VN2 ACH2 NEGATIVE DIFFERENTIAL SIGNAL
P28–VP2 ACH2 POSITIVE DIFFERENTIAL SIGNAL
P28–+5V SUPPLY (0.05 AMP MAX)
P28–GND AGND ANALOG RETURN
P28–VN1 ACH1 NEGATIVE DIFFERENTIAL SIGNAL
P28–VP1 ACH1 POSITIVE DIFFERENTIAL SIGNAL
P28–+5V SUPPLY (0.05 AMP MAX)

NOTE: CONTACT AUTHORIZED DISTRIBUTOR TO DEFINE P28 A/D INPUTS.

LEGEND
P(#) – PLUG
QCON(#) – QUICK CONNECT
TB(#) – TERMINAL BLOCK
W(#) – SONIC WELD

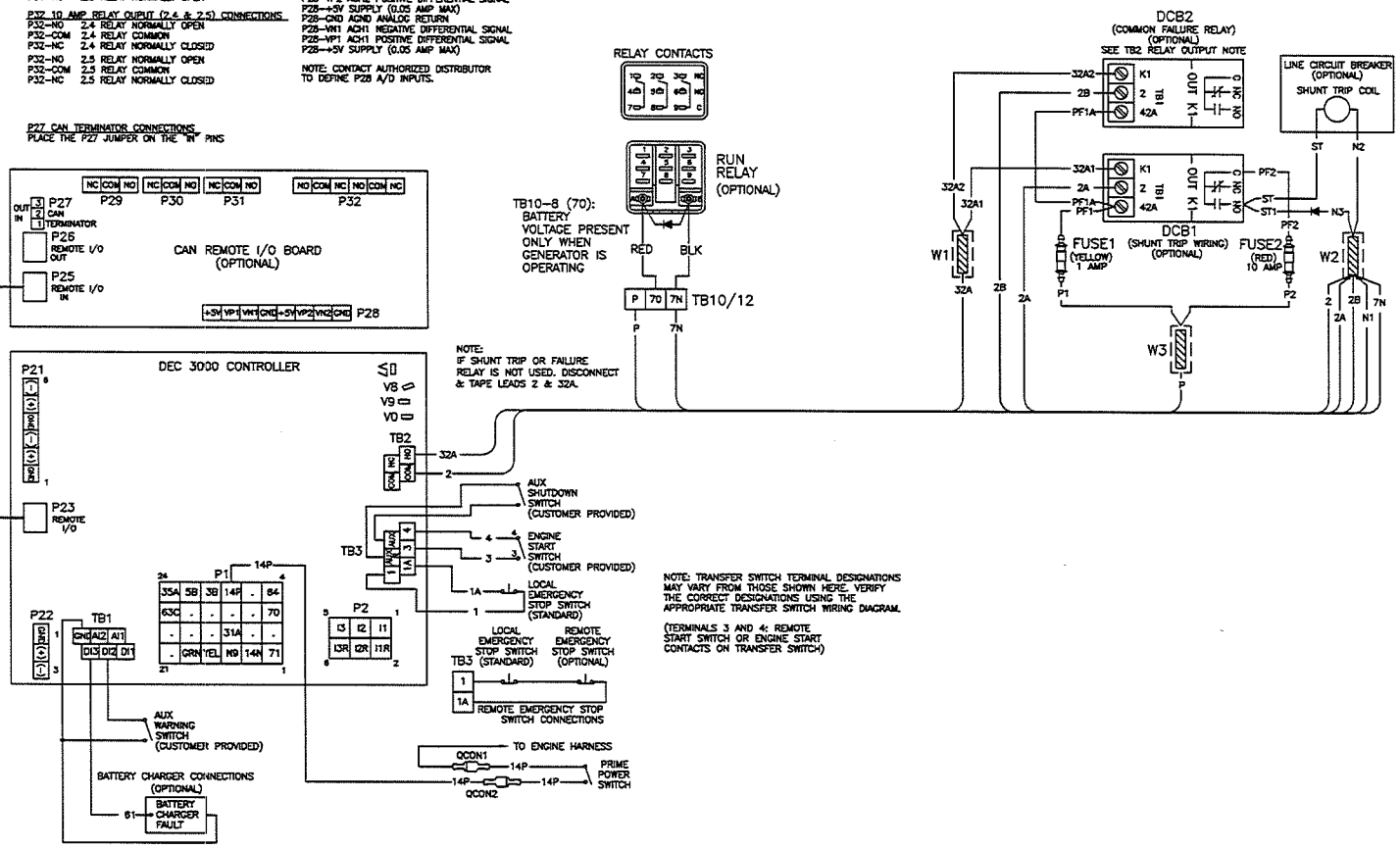

P21 RS485 NON-ISOLATED CONNECTIONS
P21–1 GND
P21–2 +
P21–3 –
P21–4 GND
P21–5 +
P21–6 –

TB1 ANALOG/DIGITAL INPUT FACTORY SETTINGS
TB1–DI1 DCH1 EXCITATION OVER VOLTAGE (4M, 5M, 7M)
TB1–DI2 DCH2 AUX WARNING
TB1–DI3 DCH3 BATTERY CHARGER FAULT WARNING
TB1–AI1 ACH1 NO FUNCTION
TB1–AI2 ACH2 NO FUNCTION
TB1–GND A/DGND ANALOG/DIGITAL RETURN

NOTE: TB1 A/D INPUTS MAY BE REDEFINED – FACTORY DEFAULTS LISTED. CONTACT AUTHORIZED DISTRIBUTOR FOR DETAILS.

TB2 RELAY OUTPUT
TB2–COM (RELAY COMMON) COMMON FAULT
TB2–COM (RELAY COMMON) COMMON FAULT
TB2–NO (RELAY NORMALLY OPEN) COMMON FAULT
TB2–NC (RELAY NORMALLY CLOSED) COMMON FAULT

NOTE: TB2 RELAY OUTPUT MAY BE REDEFINED – FACTORY DEFAULT LISTED. CONTACT AUTHORIZED DISTRIBUTOR FOR DETAILS. CUSTOMER TO CONNECT TO TB2 UNLESS SHUNT TRIP IS USED. IF SHUNT TRIP IS USED, CUSTOMER TO CONNECT TO DCB2 FOR COMMON FAULT.

INSTALLATION NOTE:
FOR FIELD INSTALLATION A MAXIMUM OF TWO WIRE TERMINALS PER TERMINAL STRIP SCREW IS RECOMMENDED UNLESS OTHERWISE NOTED ON THE WIRING DIAGRAM. DO NOT EXTEND ABOVE THE TERMINAL STRIP BARRIER.

DEC 3000 ACCESSORIES

KOHLER CO.
POWER SYSTEMS, KOHLER, WI 53044 U.S.A.

APPROVALS	DATE
CRS	9-16-10
DFS	9-16-10
CRS	9-16-10

DIAGRAM, DEC 3000
ACCY INTERCONNECTION

GM78246 D

REV	DATE	REVISION	BY	M/F
E	9-29-09	SEE SHEET 2 [88437]	TLK	
F	12-1-09	(C-3) 3000 CONTROLLER ADDED TO NOTE [88773]	TLK	
G	7-06-12	(C-2A-3) 550/3000 WAS 550; (B-3) RED OR BLUE WAS		
		RED; [CT17616]	TLK	
H	2-12-14	DRAWING COMPLETELY REVISED TO ADD RSA III, 3500, MPAC750,&		
		MPAC 1200 [CT72294]	PRH	

DC POWER REQUIREMENTS FOR EACH RSA:
RSA1000: 12/24 VOLT, 200mA DC POWER
RSA II & RSA III: 12/24 VOLT, 1A DC POWER

IF MULTIPLE RSA'S ARE USED, RESIZE 2 POWER WIRES AS REQUIRED.

0–450 FT. [0–138 m], 22 GA.
450–700 FT. [138–214 m], 20 GA.
700–1125 FT. [214–344 m], 18 GA.
1125–1800 FT. [344–550 m], 16 GA.
1800–2800 FT. [550–856 m], 14 GA.
(SEE NOTE 4)

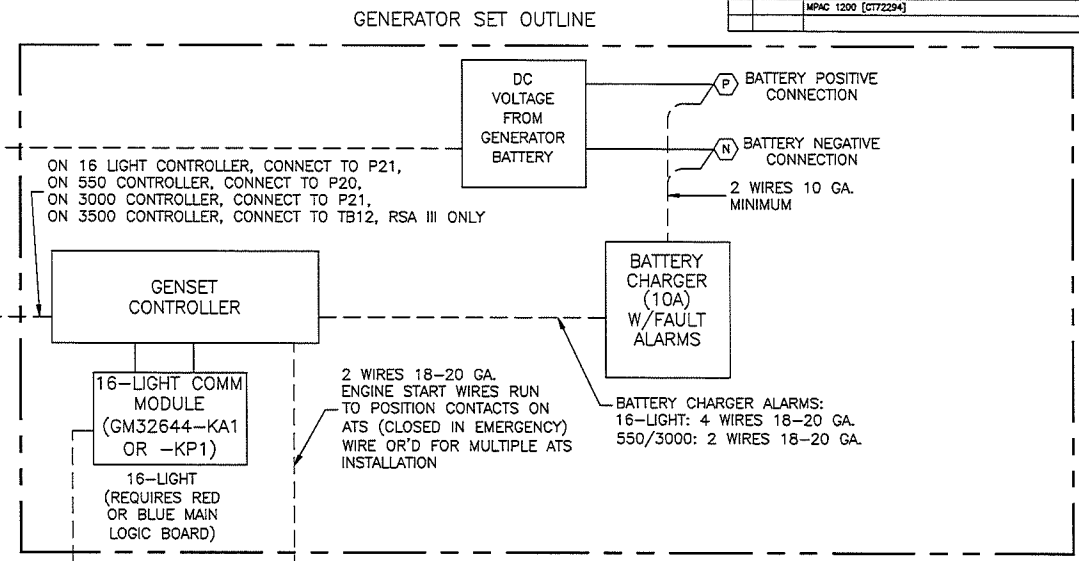

RS–485 (MODBUS RTU) (SEE NOTE 5)

RSA REMOTE SERIAL ANNUNCIATOR (MASTER)

RSA REMOTE SERIAL ANNUNCIATOR (SLAVE)

RSA REMOTE SERIAL ANNUNCIATOR (SLAVE)

RSA REMOTE SERIAL ANNUNCIATOR (SLAVE)

(SEE SHEET 2 WHEN USED WITH AN ETHERNET NETWORK)

ATS (AUTOMATIC TRANSFER SW.) RSA1000, RSAII, OR RSAIII

ATS (AUTOMATIC TRANSFER SW.) RSA III ONLY

ATS (AUTOMATIC TRANSFER SW.) RSA III ONLY

ATS (AUTOMATIC TRANSFER SW.) RSA III ONLY

EPS SUPPLYING LOAD INDICATION:

16–LIGHT ONLY: (SEE SECTION 4.6 OF TT–1485) CONNECT VIA TWO 14–20 GA. WIRES TO 16–LIGHT COMM. MODULE BOARD TO COMMUNICATE EPS SUPPLYING LOAD INDICATION VIA RS–485 NETWORK.

550/3000/3500 ONLY:
THIS CONNECTION IS NOT USED. EPS SUPPLYING LOAD INDICATION VIA RS–485 FROM GENSET CONTROLLER.

NOTE: THESE WIRES ARE WIRE OR'D FOR MULTIPLE ATS INSTALLATION.

RSA II & RSA III WITH ATS OPTION:
RS–485 TO ATS REQUIRED (MODBUS RTU) (SEE NOTE 5)

REFER TO WIRING DIAGRAM GM41145 (RSA1000) OR GM62554 (RSA II & RSA III) FOR CONNECTION DETAIL.
DIMENSIONS IN [ ] ARE METRIC EQUIVALENTS.

NOTES:
1. TYPICAL CUSTOMER WIRING SHOWN DASHED.
2. CUSTOMER RESPONSIBLE FOR ADDITIONAL WIRING SHOWN IF COMPONENTS ARE SHIPPED LOOSE (BATTERY CHARGER, DRY–CONTACT BOX, ETC.)
3. IF BATTERY CHARGER IS SHIPPED LOOSE ADDITIONAL WIRES MAY BE REQUIRED FOR PROPER VOLTAGE SENSING. REFERENCE DRAWING ADV–5971 FOR INTERCONNECT.
4. DC VOLTAGE FOR EACH RSA REMOTE ANNUNCIATOR MAY ALSO BE SUPPLIED BY A LOCALLY MOUNTED 12 OR 24 VDC, 200 mA MIN., AC ADAPTER FOR RSA1000 OR AC ADAPTER KIT (GM62466–KP1) FOR RSA II & RSA III.
5. USE BELDEN #9841 OR EQUIVALENT. MAXIMUM DISTANCE = 4000 FT. [1219 m]

INTERCONNECTION DIAGRAM
CONTROLLER
WITH RSA ANNUNCIATOR

UNLESS OTHERWISE SPECIFIED → 1) DIMENSIONS ARE IN INCHES 2) TOLERANCES ARE: .XXX± .010 ANGLE± 1/2° .XX ± .030 SURFACE FINISH .X ± .060 MAX. FRACTIONS ±

APPROVALS		DATE
DRAWN	JS	7-28-04
CHECKED	JL	7-29-04
APPROVED	JS	7-29-04

KOHLER CO.
POWER SYSTEMS, KOHLER, WI 53044 U.S.A.

THIS DRAWING, IN DESIGN AND DETAIL, IS KOHLER CO. PROPERTY AND MUST NOT BE USED EXCEPT IN CONNECTION WITH KOHLER CO. WORK. ALL RIGHTS OF DESIGN OR INVENTION ARE RESERVED.

TITLE: DIAGRAM, RSA INTERCONNECTION

SCALE: / / / | DWG NO. ADV6990A.DWG | SHEET 1–2

PLOTTED | DWG NO. ADV–6990 | C

ETHERNET NETWORK CONNECTIONS

REV	DATE	REVISION	BY	M F
E	9-29-09	RSA SLAVES REVISED; (D-4) MASTER NOTE REVISED;		
		(C-4) MAXIMUM OF 5 SLAVES WAS 4 [88437]	TLK	
F	12-1-09	(D-1) 3000 CONTROLLER ADDED TO NOTE [88773]	TLK	
G	7-06-12	SEE SHEET 1 [CT17616]	TLK	
H	2-12-14	DRAWING COMPLETELY REVISED TO ADD RSA III, 3500, MPAC750,&		
		MPAC1200 [CT72294]	PRH	

RSA1000/RSA II/RSA III MASTER:
AN RSA SLAVE CONNECTED THROUGH THE ETHERNET NETWORK, REQUIRES AN RSA MASTER BE CONNECTED THROUGH THE ETHERNET NETWORK. THE MASTER REQUIRES A MODBUS/ETHERNET CONVERTER DEDICATED EXCLUSIVELY TO IT.

RSA1000:
A MAXIMUM OF 3 SLAVES CAN BE CONNECTED TO A MASTER RSA1000, INCLUDING SLAVES CONNECTED THROUGH THE ETHERNET NETWORK.

RSA II:
A MAXIMUM OF 5 SLAVES CAN BE CONNECTED TO A MASTER RSA II, INCLUDING SLAVES CONNECTED THROUGH THE ETHERNET NETWORK. IF ANY RSA1000 ANNUNCIATORS ARE ON THE SAME NETWORK AS AN RSA II ANNUNCIATOR, THE RSA1000 ANNUNCIATORS MUST BE CONFIGURED AS SLAVES.

RSA III:
A MAXIMUM OF 5 SLAVES CAN BE CONNECTED TO A MASTER RSA III, INCLUDING SLAVES CONNECTED THROUGH THE ETHERNET NETWORK. IF ANY RSA1000 & RSA II ANNUNCIATORS ARE ON THE SAME NETWORK AS AN RSA III ANNUNCIATOR, THE RSA1000 & RSA II ANNUNCIATORS MUST BE CONFIGURED AS SLAVES.

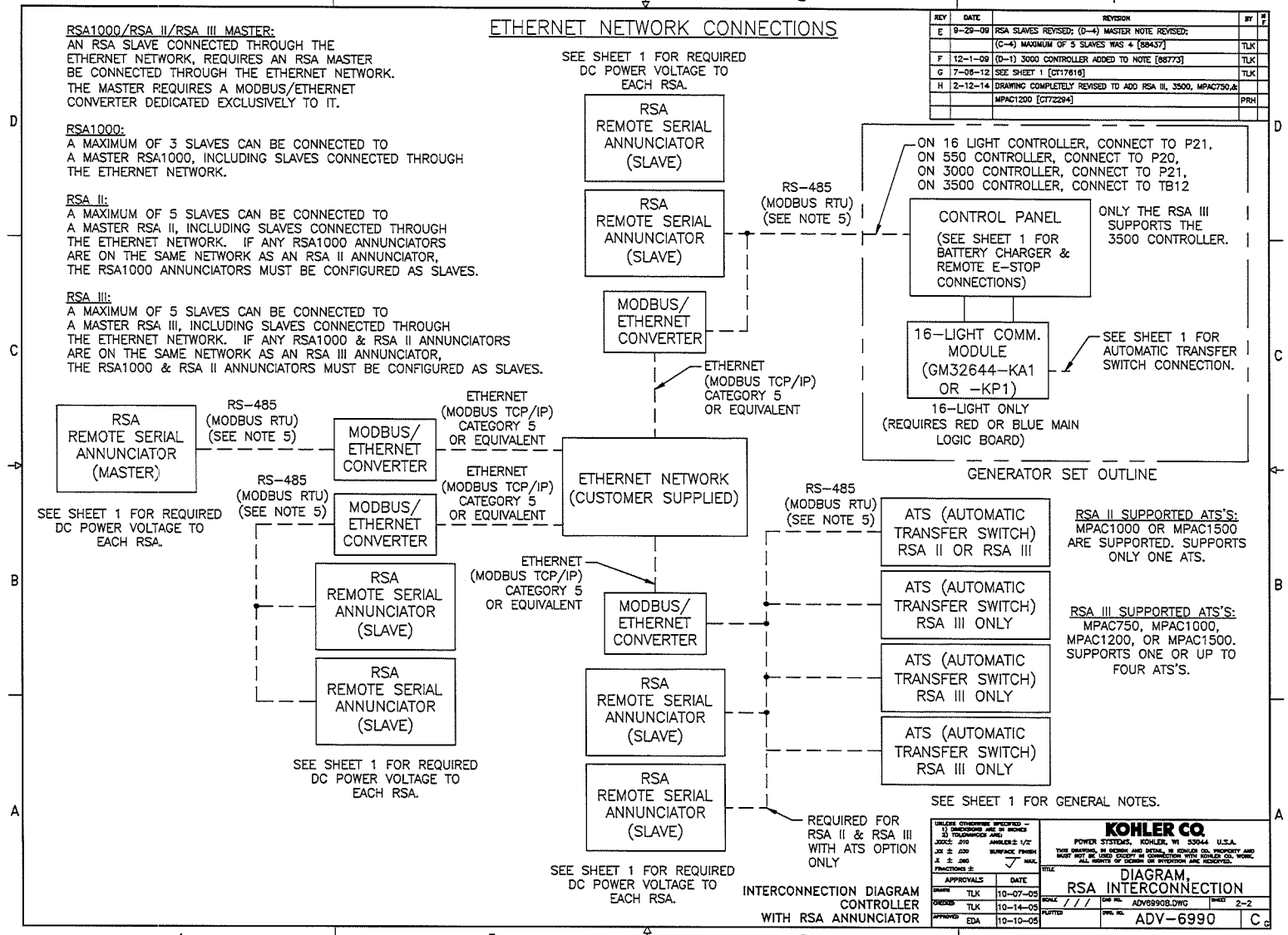

INTERCONNECTION DIAGRAM
CONTROLLER
WITH RSA ANNUNCIATOR

UNLESS OTHERWISE SPECIFIED — 1) DIMENSIONS ARE IN INCHES 2) TOLERANCES ARE: .XXX± .010 .XX± .030 .X ± .060 FRACTIONS ± ANGLES ± 1/2° SURFACE FINISH 125 MAX.

APPROVALS		DATE
DRAWN	TLK	10-07-05
CHECKED	TLK	10-14-05
APPROVED	EDA	10-10-05

KOHLER CO.
POWER SYSTEMS, KOHLER, WI 53044 U.S.A.

THIS DRAWING, IN DESIGN AND DETAIL, IS KOHLER CO. PROPERTY AND MUST NOT BE USED EXCEPT IN CONNECTION WITH KOHLER CO. WORK. ALL RIGHTS OF DESIGN OR INVENTION ARE RESERVED.

TITLE: DIAGRAM, RSA INTERCONNECTION

SCALE: / / / | CAD NO. ADV6990B.DWG | SHEET 2-2
PLOTTED | DWG. NO. ADV-6990 | C

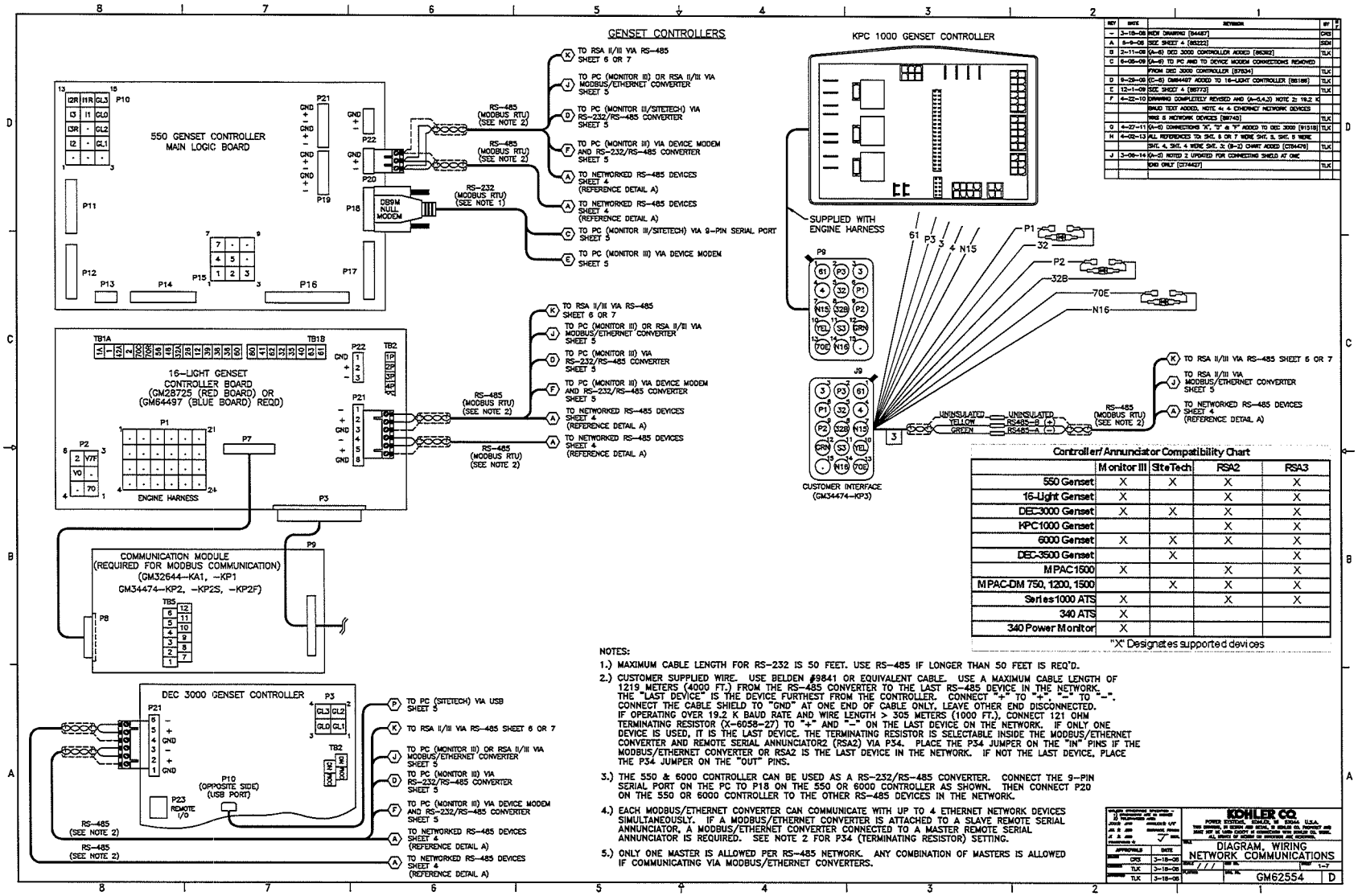

REV	DATE	REVISION	BY
–	3-18-05	NEW DRAWING [84487]	CRS
A	5-9-06	SEE SHEET 4 [85222]	SDM
B	2-11-08	(A-6) DEC 3000 CONTROLLER ADDED [86392]	TLK
C	6-05-09	(A-8) TO PC AND TO DEVICE MODEM CONNECTIONS REMOVED FROM DEC 3000 CONTROLLER [87534]	TLK
D	9-29-09	(C-8) GM64497 ADDED TO 16-LIGHT CONTROLLER [88186]	TLK
E	12-1-09	SEE SHEET 4 [88773]	TLK
F	4-22-10	DRAWING COMPLETELY REVISED AND (A-5,4,J) NOTE 2: 19.2 K BAUD TEXT ADDED, NOTE 4; 4 ETHERNET NETWORK DEVICES WIRE 8 NETWORK DEVICES [88745]	TLK
G	4-27-11	(A-5) CONNECTIONS "X", "Y" & "Y" ADDED TO DEC 3000 [91518]	TLK
H	4-02-13	ALL REFERENCES TO: SHT. 8 OR 7 WERE SHT. 3, SHT. 9 WERE SHT. 4, SHT. 4 WERE SHT. 3; (B-2) CHART ADDED [C74429]	TLK
J	3-06-14	(A-3) NOTED 2 UPDATED FOR CONNECTING SHIELD AT ONE END ONLY [C74427]	TLK

Controller/Annunciator Compatibility Chart

	Monitor III	SiteTech	RSA2	RSA3
550 Genset	X	X	X	X
16-Light Genset	X		X	X
DEC3000 Genset	X	X	X	X
KPC1000 Genset			X	X
6000 Genset	X	X	X	X
DEC-3500 Genset		X		X
MPAC1500	X		X	X
MPAC-DM 750, 1200, 1500		X	X	X
Series 1000 ATS	X		X	X
340 ATS	X			
340 Power Monitor	X			

"X" Designates supported devices

NOTES:

1.) MAXIMUM CABLE LENGTH FOR RS-232 IS 50 FEET. USE RS-485 IF LONGER THAN 50 FEET IS REQ'D.

2.) CUSTOMER SUPPLIED WIRE. USE BELDEN #9841 OR EQUIVALENT CABLE. USE A MAXIMUM CABLE LENGTH OF 1219 METERS (4000 FT.) FROM THE RS-485 CONVERTER TO THE LAST RS-485 DEVICE IN THE NETWORK. THE "LAST DEVICE" IS THE DEVICE FURTHEST FROM THE CONTROLLER. CONNECT "+" TO "+", "-" TO "-". CONNECT THE CABLE SHIELD TO "GND" AT ONE END OF CABLE ONLY. LEAVE OTHER END DISCONNECTED. IF OPERATING OVER 19.2 K BAUD RATE AND WIRE LENGTH > 305 METERS (1000 FT.), CONNECT 121 OHM TERMINATING RESISTOR (X-6058-27) TO "+" AND "-" ON THE LAST DEVICE ON THE NETWORK. IF ONLY ONE DEVICE IS USED, IT IS THE LAST DEVICE. THE TERMINATING RESISTOR IS SELECTABLE INSIDE THE MODBUS/ETHERNET CONVERTER AND REMOTE SERIAL ANNUNCIATOR2 (RSA2) VIA P34. PLACE THE P34 JUMPER ON THE "IN" PINS IF THE MODBUS/ETHERNET CONVERTER OR RSA2 IS THE LAST DEVICE IN THE NETWORK. IF NOT THE LAST DEVICE, PLACE THE P34 JUMPER ON THE "OUT" PINS.

3.) THE 550 & 6000 CONTROLLER CAN BE USED AS A RS-232/RS-485 CONVERTER. CONNECT THE 9-PIN SERIAL PORT ON THE PC TO P18 ON THE 550 OR 6000 CONTROLLER AS SHOWN. THEN CONNECT P20 ON THE 550 OR 6000 CONTROLLER TO THE OTHER RS-485 DEVICES IN THE NETWORK.

4.) EACH MODBUS/ETHERNET CONVERTER CAN COMMUNICATE WITH UP TO 4 ETHERNET NETWORK DEVICES SIMULTANEOUSLY. IF A MODBUS/ETHERNET CONVERTER IS ATTACHED TO A SLAVE REMOTE SERIAL ANNUNCIATOR, A MODBUS/ETHERNET CONVERTER CONNECTED TO A MASTER REMOTE SERIAL ANNUNCIATOR IS REQUIRED. SEE NOTE 2 FOR P34 (TERMINATING RESISTOR) SETTING.

5.) ONLY ONE MASTER IS ALLOWED PER RS-485 NETWORK. ANY COMBINATION OF MASTERS IS ALLOWED IF COMMUNICATING VIA MODBUS/ETHERNET CONVERTERS.

APPROVALS	DATE
DRAWN CRS	3-18-05
CHECKED TLK	3-18-05
ENGINEER TLK	3-18-05

KOHLER CO.
KOHLER, WISCONSIN U.S.A.

TITLE: DIAGRAM, WIRING NETWORK COMMUNICATIONS

SCALE: /// SHEET 1-7

DWG NO. GM62554 D

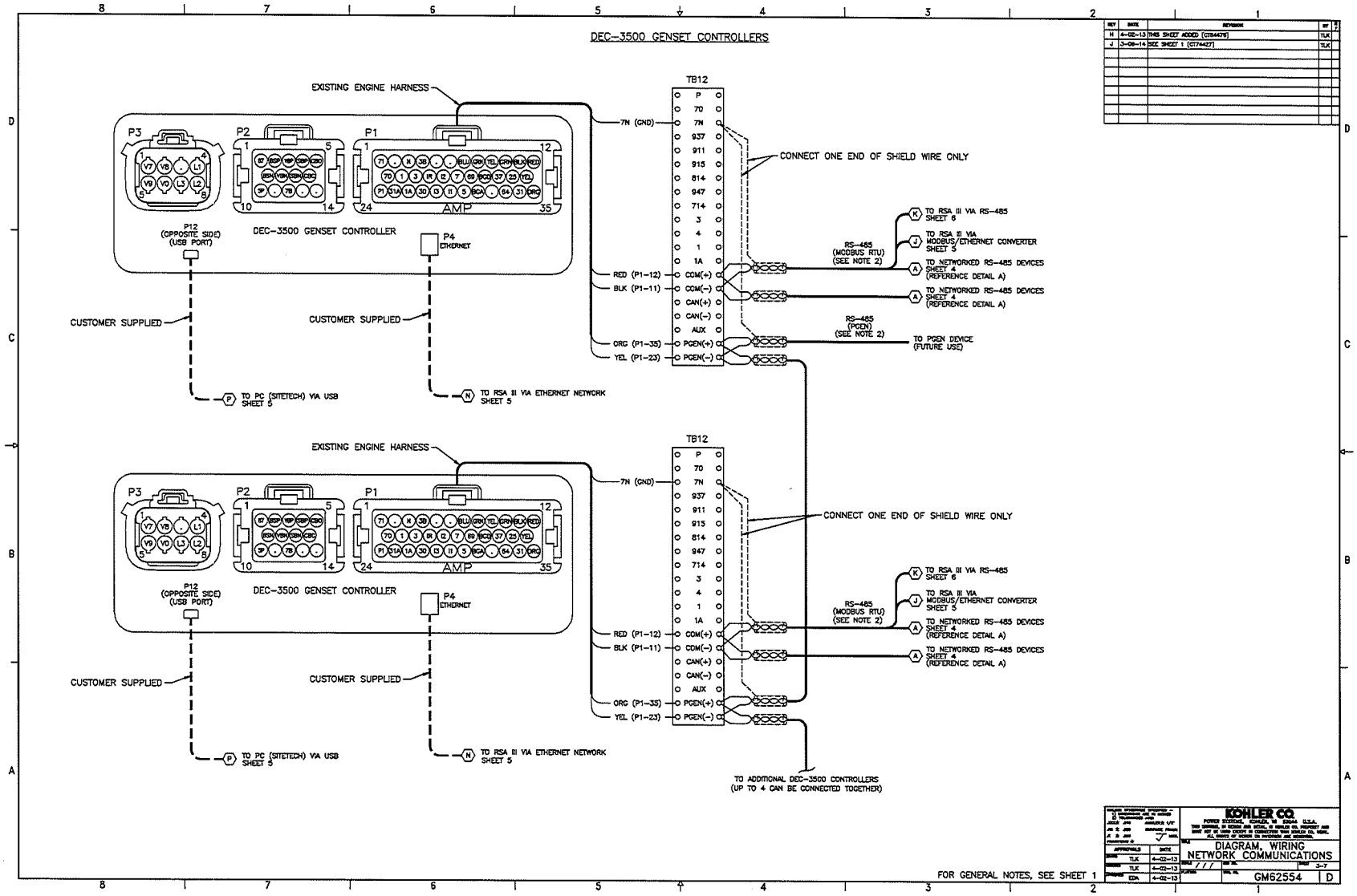
DEC-3500 GENSET CONTROLLERS
EXISTING ENGINE HARNESS
P3
P2
P1
AMP
DEC-3500 GENSET CONTROLLER
P12 (OPPOSITE SIDE) (USB PORT)
P4 ETHERNET
CUSTOMER SUPPLIED
TO PC (SITETECH) VIA USB SHEET 5
TO RSA III VIA ETHERNET NETWORK SHEET 5
TB12
7N (GND)
RED (P1-12)
BLK (P1-11)
ORG (P1-35)
YEL (P1-23)
CONNECT ONE END OF SHIELD WIRE ONLY
RS-485 (MODBUS RTU) (SEE NOTE 2)
TO RSA III VIA RS-485 SHEET 6
TO RSA III VIA MODBUS/ETHERNET CONVERTER SHEET 5
TO NETWORKED RS-485 DEVICES SHEET 4 (REFERENCE DETAIL A)
TO NETWORKED RS-485 DEVICES SHEET 4 (REFERENCE DETAIL A)
RS-485 (PGEN) (SEE NOTE 2)
TO PGEN DEVICE (FUTURE USE)
TO ADDITIONAL DEC-3500 CONTROLLERS (UP TO 4 CAN BE CONNECTED TOGETHER)
FOR GENERAL NOTES, SEE SHEET 1
KOHLER CO.
DIAGRAM, WIRING NETWORK COMMUNICATIONS
GM62554
D

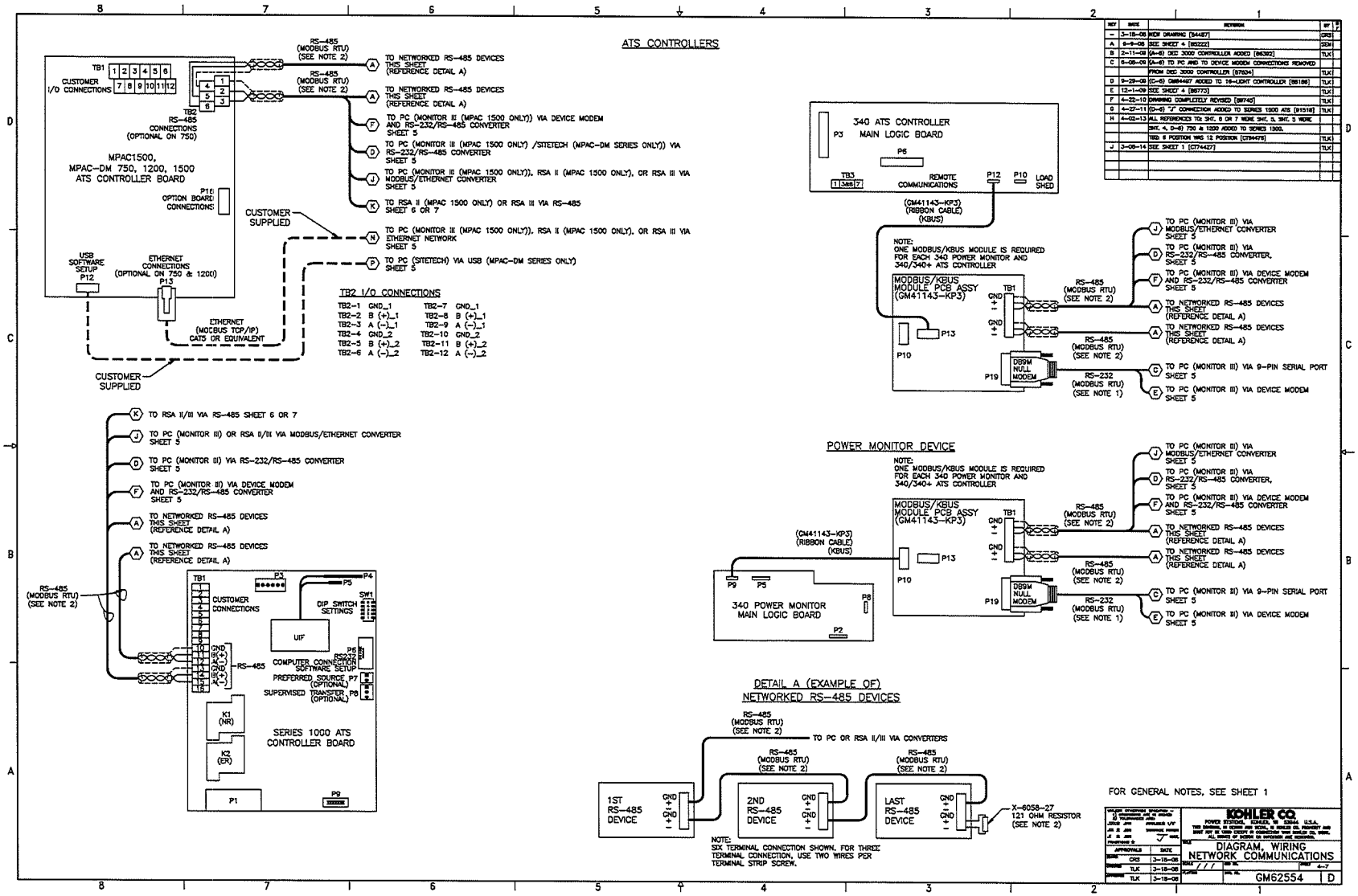

REV	DATE	REVISION	BY	CK
–	3-18-08	NEW DRAWING [94487]	CRS	
A	6-9-08	SEE SHEET 4 [95222]	SDM	
B	2-11-09	(A-8) DEC 3000 CONTROLLER ADDED [96392]	TLK	
C	6-08-09	(A-8) TO PC AND TO DEVICE MODEM CONNECTIONS REMOVED FROM DEC 3000 CONTROLLER [97504]	TLK	
D	9-29-09	(C-6) GM64427 ADDED TO 16-LIGHT CONTROLLER [98186]	TLK	
E	12-1-09	SEE SHEET 4 [99773]	TLK	
F	4-22-10	DRAWING COMPLETELY REVISED [99745]	TLK	
G	4-27-11	(D-6) "J" CONNECTION ADDED TO SERIES 1500 ATS [101518]	TLK	
H	4-02-13	ALL REFERENCES TO: SHT. 6 OR 7 WERE SHT. 5, SHT. 5 WERE SHT. 4, D-6) 750 & 1200 ADDED TO SERIES 1500. TB2: 6 POSITION WAS 12 POSITION [C194475]	TLK	
J	3-06-14	SEE SHEET 1 [C174427]	TLK	

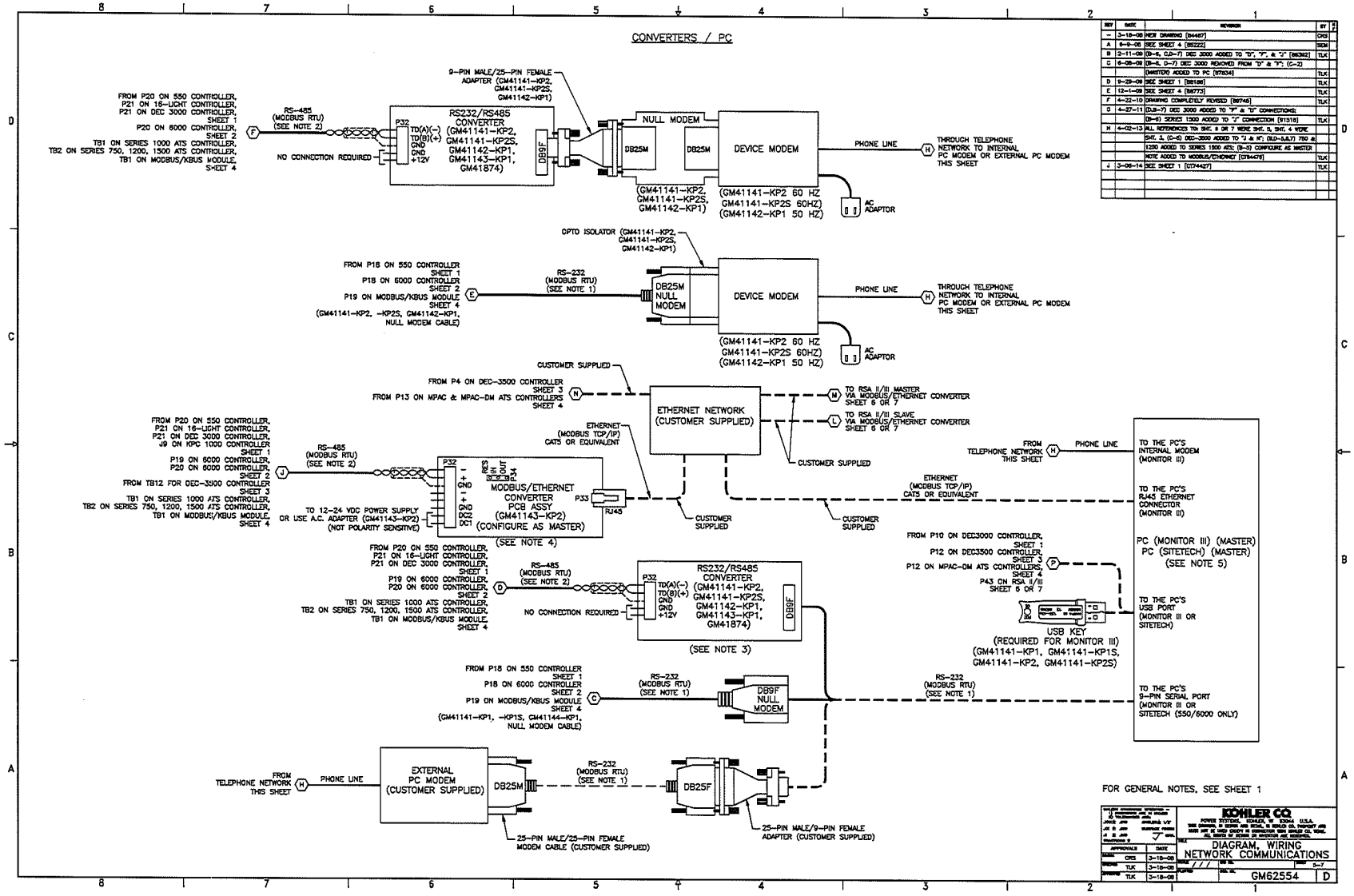
CONVERTERS / PC
FROM P20 ON 550 CONTROLLER, P21 ON 16-LIGHT CONTROLLER, P21 ON DEC 3000 CONTROLLER, SHEET 1
P20 ON 6000 CONTROLLER, SHEET 2
TB1 ON SERIES 1000 ATS CONTROLLER, TB2 ON SERIES 750, 1200, 1500 ATS CONTROLLER, TB1 ON MODBUS/KBUS MODULE, SHEET 4
RS-485 (MODBUS RTU) (SEE NOTE 2)
NO CONNECTION REQUIRED
RS232/RS485 CONVERTER (GM41141-KP2, GM41141-KP2S, GM41142-KP1, GM41143-KP1, GM41874)
9-PIN MALE/25-PIN FEMALE ADAPTER (GM41141-KP2, GM41141-KP2S, GM41142-KP1)
NULL MODEM
DEVICE MODEM
PHONE LINE
THROUGH TELEPHONE NETWORK TO INTERNAL PC MODEM OR EXTERNAL PC MODEM THIS SHEET
(GM41141-KP2, GM41141-KP2S, GM41142-KP1)
(GM41141-KP2 60 HZ GM41141-KP2S 60HZ) (GM41142-KP1 50 HZ)
AC ADAPTOR
OPTO ISOLATOR (GM41141-KP2, GM41141-KP2S, GM41142-KP1)
FROM P18 ON 550 CONTROLLER SHEET 1
P18 ON 6000 CONTROLLER SHEET 2
P19 ON MODBUS/KBUS MODULE SHEET 4
(GM41141-KP2, -KP2S, GM41142-KP1, NULL MODEM CABLE)
RS-232 (MODBUS RTU) (SEE NOTE 1)
DB25M NULL MODEM
CUSTOMER SUPPLIED
FROM P4 ON DEC-3500 CONTROLLER SHEET 3
FROM P13 ON MPAC & MPAC-DM ATS CONTROLLERS SHEET 4
ETHERNET NETWORK (CUSTOMER SUPPLIED)
TO RSA II/III MASTER VIA MODBUS/ETHERNET CONVERTER SHEET 6 OR 7
TO RSA II/III SLAVE VIA MODBUS/ETHERNET CONVERTER SHEET 6 OR 7
ETHERNET (MODBUS TCP/IP) CAT5 OR EQUIVALENT
FROM P20 ON 550 CONTROLLER, P21 ON 16-LIGHT CONTROLLER, P21 ON DEC 3000 CONTROLLER, J9 ON KPC 1000 CONTROLLER SHEET 1
P19 ON 6000 CONTROLLER, P20 ON 6000 CONTROLLER, SHEET 2
FROM TB12 FOR DEC-3500 CONTROLLER SHEET 3
TB1 ON SERIES 1000 ATS CONTROLLER, TB2 ON SERIES 750, 1200, 1500 ATS CONTROLLER, TB1 ON MODBUS/KBUS MODULE, SHEET 4
TO 12-24 VDC POWER SUPPLY OR USE A.C. ADAPTER (GM41143-KP2) (NOT POLARITY SENSITIVE)
MODBUS/ETHERNET CONVERTER PCB ASSY (GM41143-KP2) (CONFIGURE AS MASTER)
(SEE NOTE 4)
RJ45
CUSTOMER SUPPLIED
FROM TELEPHONE NETWORK THIS SHEET
PHONE LINE
TO THE PC'S INTERNAL MODEM (MONITOR III)
TO THE PC'S RJ45 ETHERNET CONNECTOR (MONITOR II)
PC (MONITOR III) (MASTER) PC (SITETECH) (MASTER) (SEE NOTE 5)
TO THE PC'S USB PORT (MONITOR III OR SITETECH)
TO THE PC'S 9-PIN SERIAL PORT (MONITOR III OR SITETECH (550/6000 ONLY)
FROM P20 ON 550 CONTROLLER, P21 ON 16-LIGHT CONTROLLER, P21 ON DEC 3000 CONTROLLER, SHEET 1
P19 ON 6000 CONTROLLER, P20 ON 6000 CONTROLLER, SHEET 2
TB1 ON SERIES 1000 ATS CONTROLLER, TB2 ON SERIES 750, 1200, 1500 ATS CONTROLLER, TB1 ON MODBUS/KBUS MODULE, SHEET 4
RS232/RS485 CONVERTER (GM41141-KP2, GM41141-KP2S, GM41142-KP1, GM41143-KP1, GM41874)
(SEE NOTE 3)
FROM P10 ON DEC3000 CONTROLLER, SHEET 1
P12 ON DEC3500 CONTROLLER, SHEET 3
P12 ON MPAC-DM ATS CONTROLLERS, SHEET 4
P43 ON RSA II/III SHEET 6 OR 7
USB KEY (REQUIRED FOR MONITOR III) (GM41141-KP1, GM41141-KP1S, GM41141-KP2, GM41141-KP2S)
FROM P18 ON 550 CONTROLLER SHEET 1
P18 ON 6000 CONTROLLER SHEET 2
P19 ON MODBUS/KBUS MODULE SHEET 4
(GM41141-KP1, -KP1S, GM41144-KP1, NULL MODEM CABLE)
DB9F NULL MODEM
EXTERNAL PC MODEM (CUSTOMER SUPPLIED)
DB25M
DB25F
25-PIN MALE/25-PIN FEMALE MODEM CABLE (CUSTOMER SUPPLIED)
25-PIN MALE/9-PIN FEMALE ADAPTER (CUSTOMER SUPPLIED)
FOR GENERAL NOTES, SEE SHEET 1
KOHLER CO.
DIAGRAM, WIRING NETWORK COMMUNICATIONS
GM62554
D

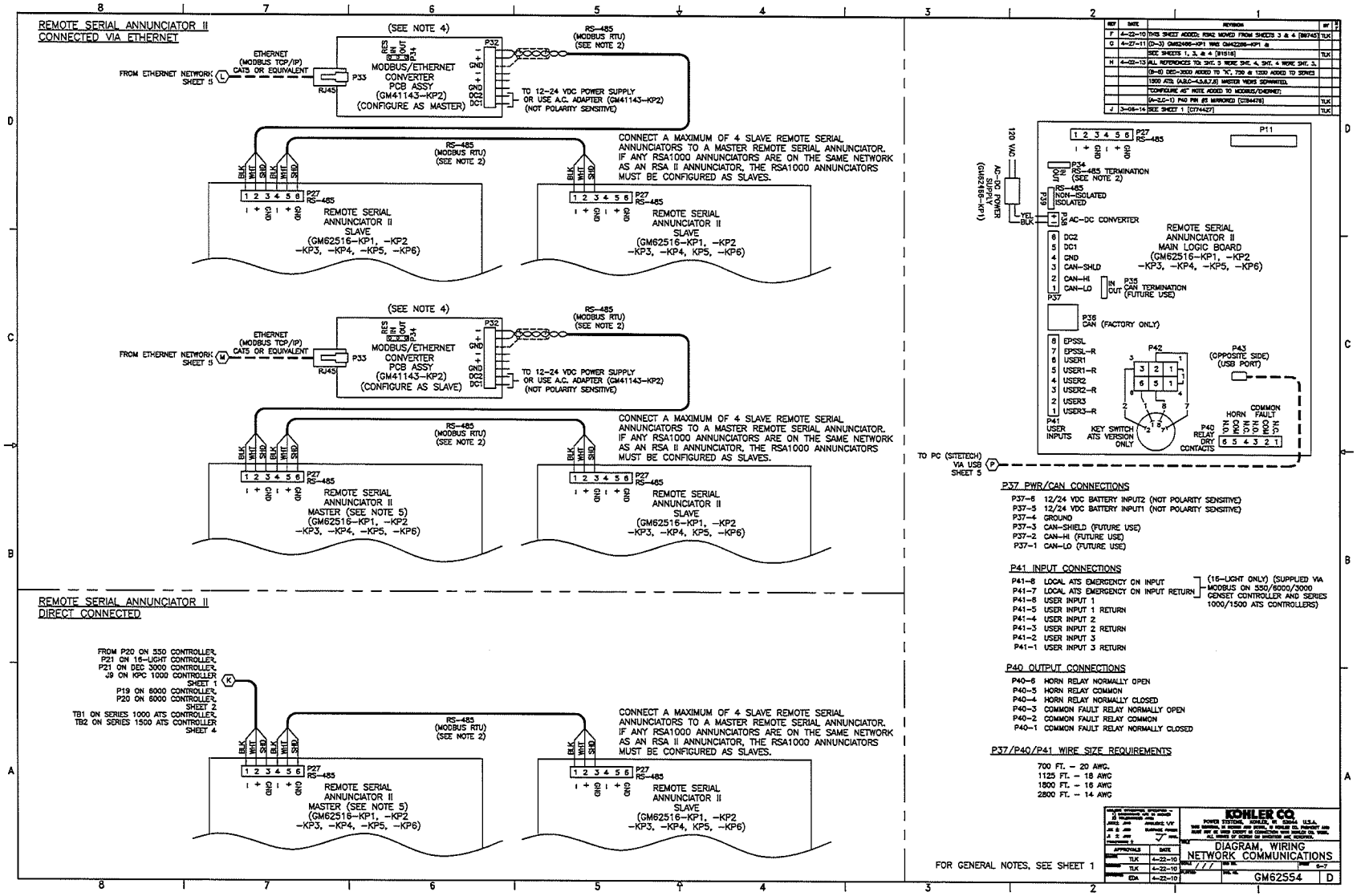

REV	DATE	REVISION	BY	CK
F	4-22-10	THIS SHEET ADDED; P3M2 MOVED FROM SHEETS 3 & 4 [99745]	TLK	
G	4-27-11	(D-3) GM62496-KP1 WAS GM42286-KP1 @		
		SEE SHEETS 1, 3, & 4 [91518]	TLK	
H	4-22-13	ALL REFERENCES TO SHT. 3 WERE SHT. 4, SHT. 4 WERE SHT. 3.		
		(B-0) DEC-3000 ADDED TO "K". 750 & 1250 ADDED TO SERIES		
		1000 ATS. (A,B,C-4,5,6,7,8) MASTER WERE SEPARATED.		
		"CONFIGURE AS" NOTE ADDED TO MODBUS/ETHERNET.		
		(A-2,C-1) P40 PIN #3 MARKED [C184478]	TLK	
J	3-06-14	SEE SHEET 1 [C174427]	TLK	

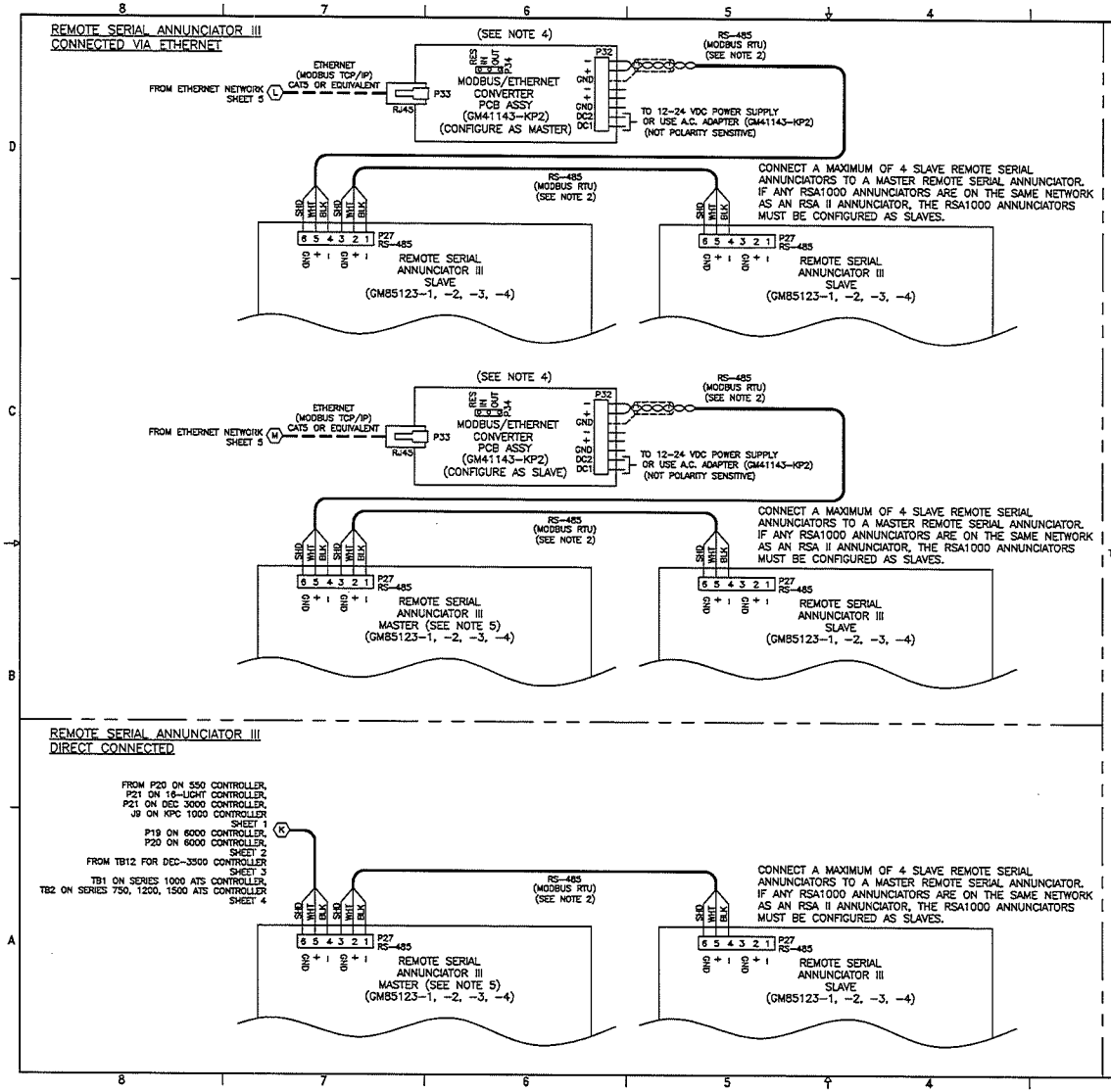

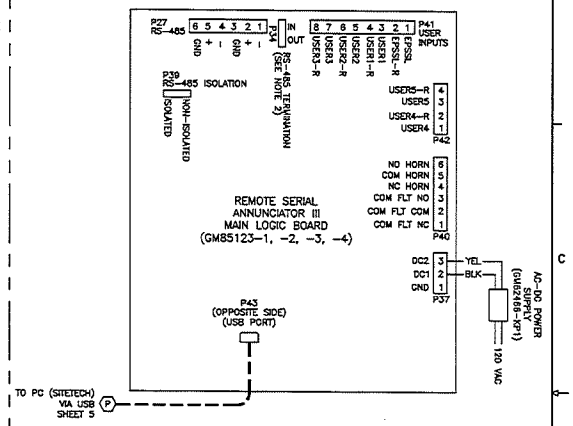

REV	DATE	REVISION	BY
H	11-20-13	THIS SHEET ADDED [CT64476]	TLK
J	3-08-14	SEE SHEET 1 [CT74427]	TLK

P41 INPUT CONNECTIONS

P41-8 USER INPUT 3 RETURN
P41-7 USER INPUT 3
P41-6 USER INPUT 2 RETURN
P41-5 USER INPUT 2
P41-4 USER INPUT 1 RETURN
P41-3 USER INPUT 1
P41-2 LOCAL ATS EMERGENCY ON INPUT RETURN
P41-1 LOCAL ATS EMERGENCY ON INPUT
(16-LIGHT ONLY) (SUPPLIED VIA MODBUS ON 550/6000/3000/3500 GENSET CONTROLLER AND SERIES 1000/750/1200/1500 ATS CONTROLLERS)

P42 INPUT CONNECTIONS

P41-4 USER INPUT 5 RETURN
P41-3 USER INPUT 5
P41-2 USER INPUT 4 RETURN
P41-1 USER INPUT 4

P40 OUTPUT CONNECTIONS

P40-6 HORN RELAY NORMALLY OPEN
P40-5 HORN RELAY COMMON
P40-4 HORN RELAY NORMALLY CLOSED
P40-3 COMMON FAULT RELAY NORMALLY OPEN
P40-2 COMMON FAULT RELAY COMMON
P40-1 COMMON FAULT RELAY NORMALLY CLOSED

P37 PWR/CAN CONNECTIONS

P37-3 12/24 VDC BATTERY INPUT2 (NOT POLARITY SENSITIVE)
P37-2 12/24 VDC BATTERY INPUT1 (NOT POLARITY SENSITIVE)
P37-1 GROUND

P37/P40/P41 WIRE SIZE REQUIREMENTS

700 FT. - 20 AWG.
1125 FT. - 18 AWG
1800 FT. - 16 AWG
2800 FT. - 14 AWG

FOR GENERAL NOTES, SEE SHEET 1

KOHLER CO.
POWER SYSTEMS, KOHLER, WI 53044 U.S.A.

APPROVALS	DATE
TLK	11-20-13
TLK	11-20-13
EDA	11-20-13

DIAGRAM, WIRING
NETWORK COMMUNICATIONS

SCALE / / / SHEET 7-7

GM62554 D

KOHLER POWER SYSTEMS

Miscellaneous

REV	DATE	REVISION	BY
A	12-8-97	(A-4) DC WIRE RECOMMENDATION NOTE REVISED [53098]	KAR

LV – N.O. CONTACTS, CLOSE ON LOW BATTERY VOLTAGE

HV – N.O. CONTACTS, CLOSE ON HIGH BATTERY VOLTAGE

CM – N.O. CONTACTS, CLOSE ON LOSS OF AC INPUT OR LOSS OF DC OUTPUT

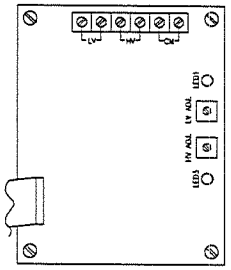

VIEW A–A
OPTIONAL ALARM BOARD

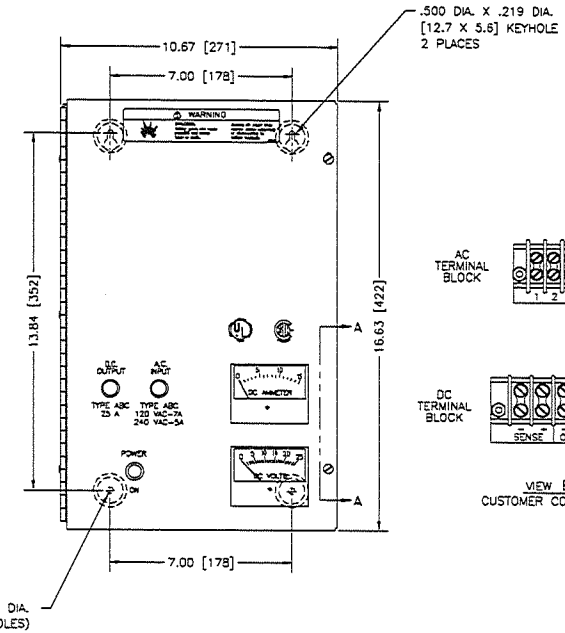

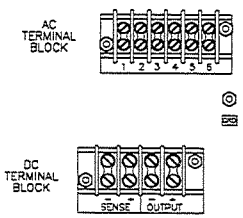

VIEW B–B
CUSTOMER CONNECTIONS

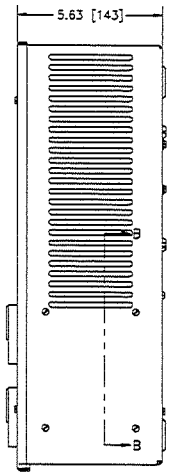

CUSTOMER INPUT CONNECTIONS	CUSTOMER OUTPUT CONNECTIONS
AC TERMINAL BLOCK	DC TERMINAL BLOCK

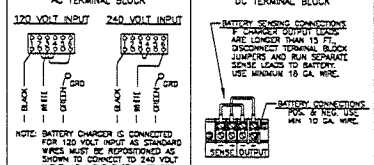

NOTE: BATTERY CHARGER IS CONNECTED FOR 120 VOLT INPUT AS STANDARD WIRES MUST BE REPOSITIONED AS SHOWN TO CONNECT TO 240 VOLT INPUT. AC INPUT FUSE MUST BE CHANGED TO AGREE AS SHOWN BELOW. FUSE SUPPLIED.

INPUT	FUSE
120 VAC	7A, TYPE ABC
240 VAC	5A, TYPE ABC

DC WIRE RECOMMENDATION: USE STRANDED COPPER WIRE, 600V, 90°C, MINIMUM .03 INCH THICK INSULATION RESISTANT TO OIL AND ACIDS.

NOTE:

DIMENSIONS IN [ ] ARE MILLIMETERS.

AUTO–FLOAT
12 & 24 VOLT
BATTERY CHARGER

KOHLER CO.
POWER SYSTEMS, KOHLER, WI 53044 U.S.A.

APPROVALS	DATE
DRAWN LRH	6-29-94
CHECKED JS	6-29-94
APPROVED TJM	6-29-94

TITLE: DIMENSION PRINT

SCALE 1/2 | DWG NO ADV5971.DWG | SHEET 1-1

PLOTTED | DWG NO ADV-5971 | D

REV	DATE	REVISION	BY
A	2-1-93	(C-3) AC & DC FUSE SYMBOLS REVISED	RSH

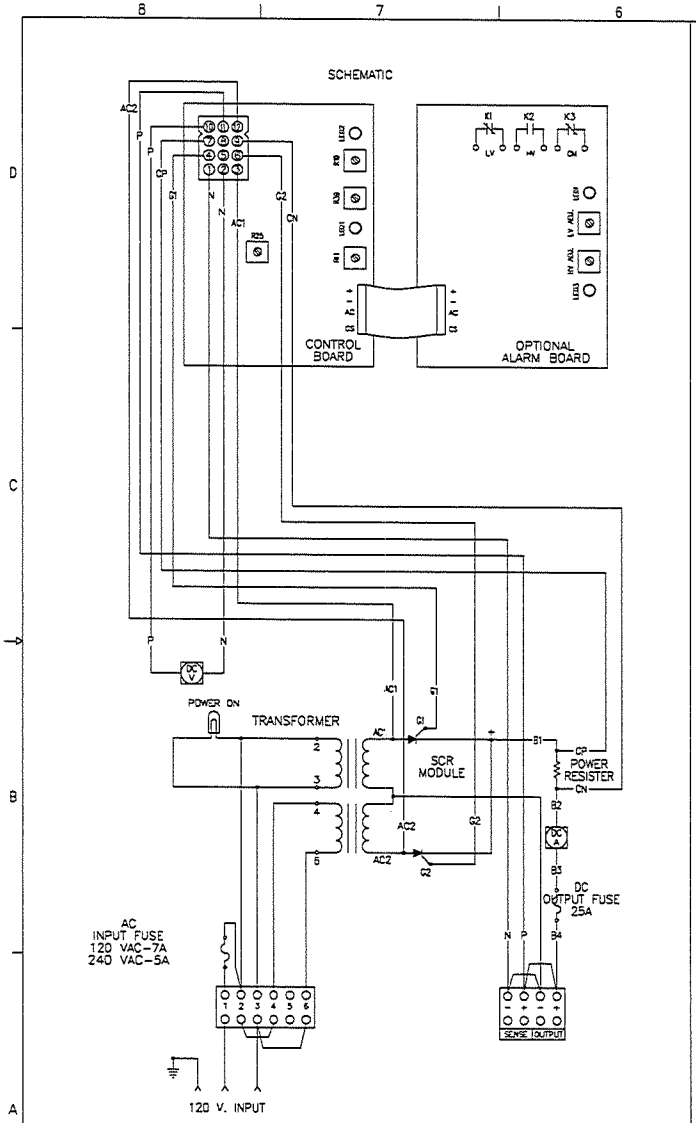

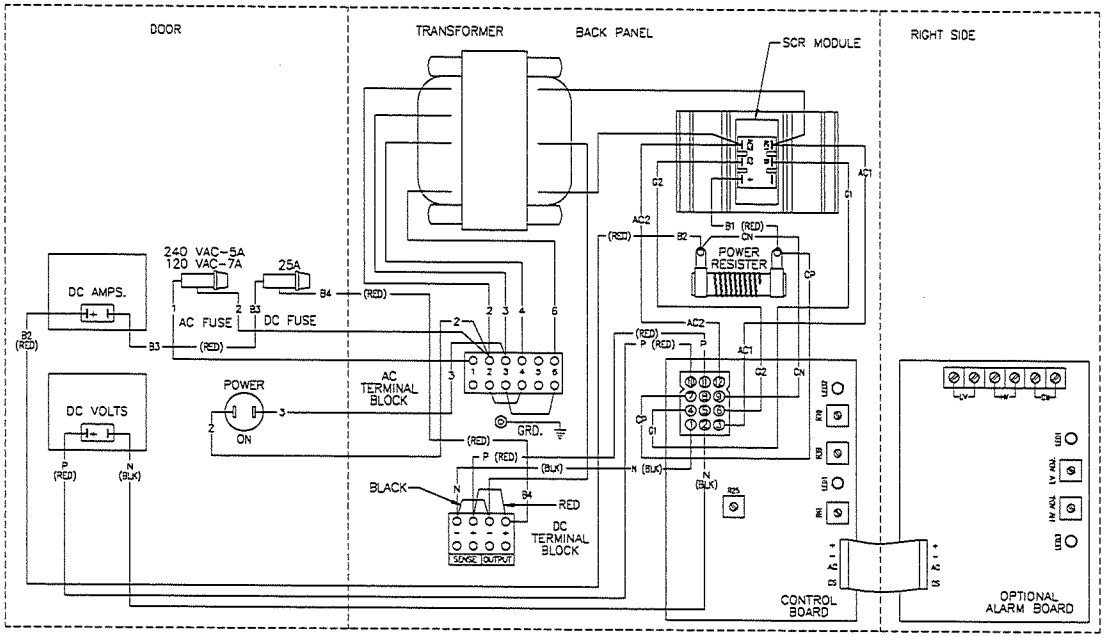

CUSTOMER INPUT CONNECTIONS

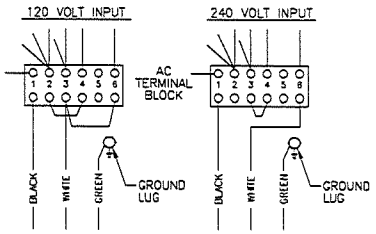

NOTE:
WHEN CHANGING AC INPUT VOLTAGE, THE AC INPUT FUSE MUST BE CHANGED TO AGREE AS SHOWN.

INPUT	FUSE
120 VAC	7A, TYPE ABC
240 VAC	5A, TYPE ABC

AUTO-FLOAT
12 VOLT
BATTERY CHARGER

KOHLER CO.
GENERATOR DIVISION, KOHLER, WI 53044 U.S.A.

APPROVALS		DATE
DRAWN	VM	2-11-92
CHECKED	JS	3-3-92
APPROVED	DAH	3-11-92

TITLE: DIAGRAM, WIRING

DWG NO. 233967.DWG SHEET 1-1

SCALE / / / SIZE D

DRW. NO. 233967

PART NO.	REV	VOLTS	WATTS	A ±1.0 LENGTH	COMMENTS
336814	H	120	80	1117.6	USE WITH BATTERY HEATER PADS 336826, 336827, 336828
GM22367	H	120	100	1422.4	USE WITH BATTERY HEATER PAD GM22388

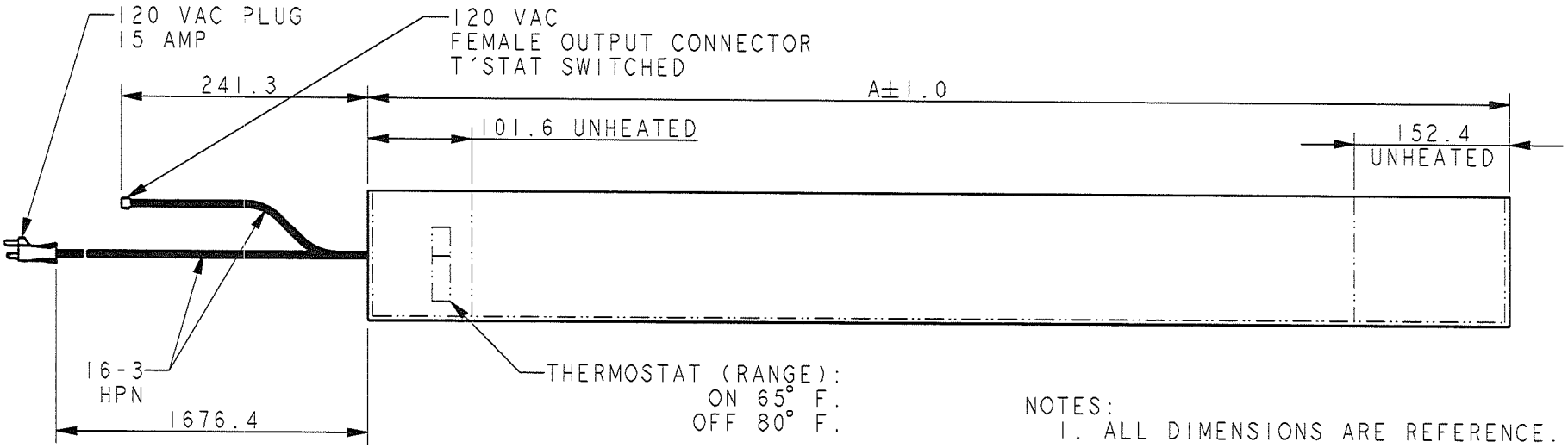

NOTES:
1. ALL DIMENSIONS ARE REFERENCE.
2. SECURE BATTERY WRAP TO BATTERY WITH WIRE TIES.

REV	DATE	ON COMPOSITE DWGS, SEE PART NO. FOR REVISION LEVEL	BY
F	9-17-01	(D-4) GM22367 & CHART ADDED; (A-4) NOTE 2	
		UPDATED & NOTE 3 REMOVED; [65409]	BTW
G	3-12-07	(C-3) FEMALE ADDED TO DESCRIPTION [80662]	GFR
H	8-22-08	CONVETED TO METRIC [85605-2]	CWF

UNLESS OTHERWISE SPECIFIED -
1) DIMENSIONS ARE IN MILLIMETERS
2) TOLERANCES ARE:
X.XX ± 0.25
X.X ± 1.0
X ± 1.5
ANGLES ± 0° 30'
SURFACE FINISH MAX.
THIRD ANGLE PROJECTION

APPROVALS		DATE
DRAWN	RSH	11-28-95
CHECKED	CFW	11-28-95
APPROVED	CFW	11-28-95

KOHLER CO. METRIC | PRO-E
POWER SYSTEMS, KOHLER, WI 53044 U.S.A.

THIS DRAWING IN DESIGN AND DETAIL IS KOHLER CO. PROPERTY AND MUST NOT BE USED EXCEPT IN CONNECTION WITH KOHLER CO. WORK. ALL RIGHTS OF DESIGN OR INVENTION ARE RESERVED.

TITLE **WRAP, BATTERY**

SCALE 0.25 | CAD NO. | SHEET 1 of 1
DWG NO. **336814** | **B**

PART NO.	REV	A (REF.) MM[IN.]	B (REF.) MM[IN.]	C (REF.) MM[IN.]	D (REF.) MM[IN.]	TOTAL WIRE LENGTH (REF.) MM[IN.]	WIRE RESISTANCE OHMS/IN (REF.)	TOTAL WATTAGE (REF.)	PAD WATTS/SQ.IN. (REF.)	OPERATING VAC
336825	G	215.9[8.50]	171.5[6.75]	57.2[2.25]	15.87[.625]	8890[350]	1.325	31.1	.505	120
336826	G	254.0[10.00]	152.4[6.00]	50.8[2.00]	12.70[.500]	9296[366]	1.325	29.7	.495	120
336827	G	330.2[13.00]	165.1[6.50]	57.2[2.25]	-	-	-	40	-	120

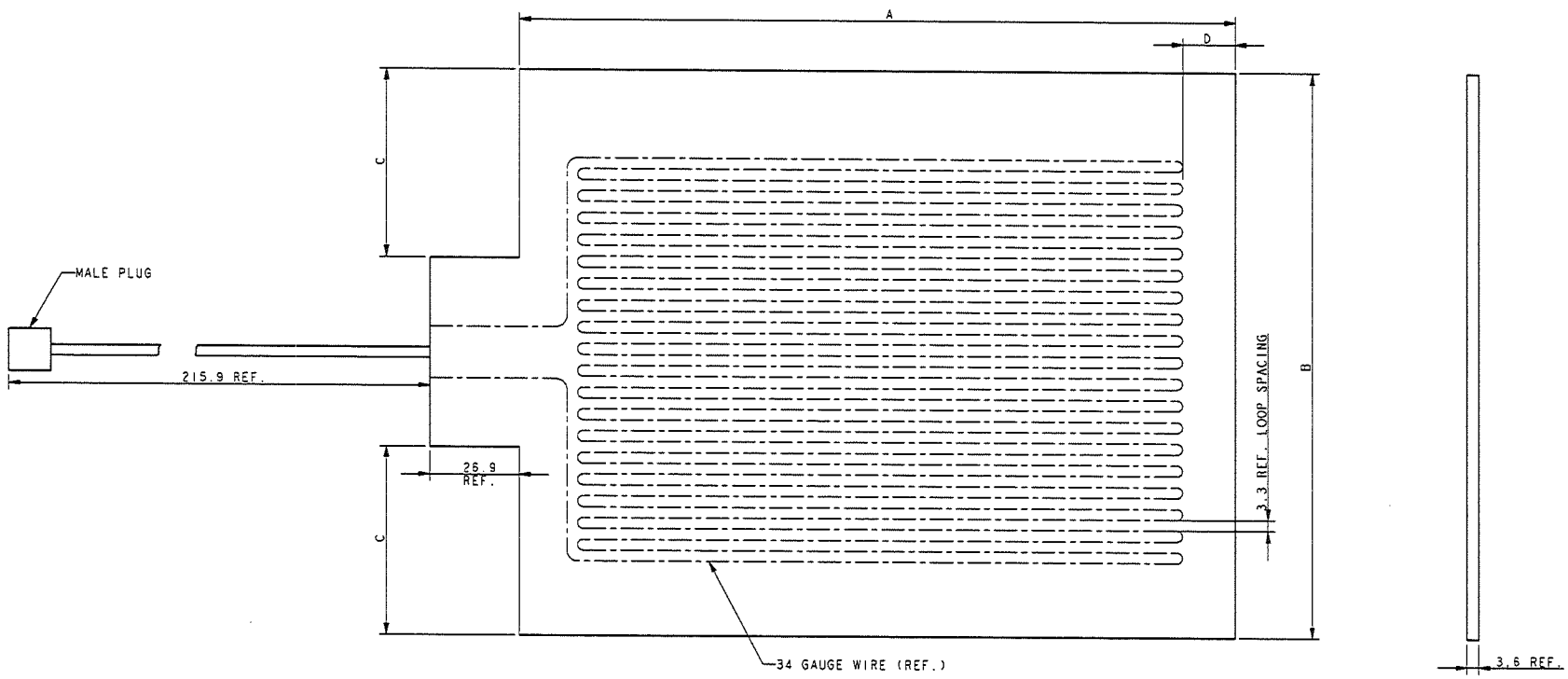

NOTE:
MUST BE USED WITH 336814 BATTERY WRAP.

REV	DATE	ON COMPOSITE DWGS. SEE PART NO. FOR REVISION LEVEL	BY
E	4-27-06	(D-4) REF ADDED TO DIMS "A", "B" & "C"	
		(D-3) 336827: 40 ADDED TO WATT (D-2)	
		OPERATING VAC ADDED (B-1, -2, -4) REF	
		ADDED TO .14, .125 & 8.5 DIMS [77518]	SAM
F	3-12-07	(C-4) MALE PLUG NOTE ADDED [80662]	GFR
G	5-9-07	CONVERTED TO METRIC: SCALE 1.5 WAS NONE: "D"	
		SIZE WAS "B" SIZE [85605-2]	MJN

UNLESS OTHERWISE SPECIFIED - 1) DIMENSIONS ARE IN MILLIMETERS 2) TOLERANCES ARE:
X XX ± 0.25
X X ± 1.0
X ± 1.5
ANGLES ± 0° 30'
SURFACE FINISH MAX
THIRD ANGLE PROJECTION

APPROVALS		DATE
DRAWN	RSH	10-13-95
CHECKED	CFW	10-28-95
APPROVED	CFW	10-28-95

KOHLER CO. METRIC PRO-E
POWER SYSTEMS, KOHLER, WI 53044 U.S.A.
THIS DRAWING IN DESIGN AND DETAIL IS KOHLER CO. PROPERTY AND MUST NOT BE USED EXCEPT IN CONNECTION WITH KOHLER CO. WORK. ALL RIGHTS OF DESIGN OR INVENTION ARE RESERVED.

TITLE
PAD, BATTERY HEATER

SCALE 1.5 | CAD NO. | SHEET 1 of 1
DWG NO. 336825 | D

125-180 KW
JOHN DEERE 6081

KIT NO.	① HEATER PAD	② HEATER WRAP	③ TIE, CABLE	BATT. QTY.	APPROXIMATE BATTERY BASE SIZE
358225	336825 (1)	336814 (1)	X-468-1 (2)	1	6.5 X 8.1
352667	336825 (2)	336814 (2)	X-468-1 (4)	2	6.5 X 8.1
352359	336826 (1)	336814 (1)	X-468-1 (2)	1	6.0 X 10.0
338830	336826 (2)	336814 (2)	X-468-1 (4)	2	6.0 X 10.0
~~GM14226-KA1~~	~~336826 (3)~~	~~336814 (3)~~	~~X-468-1 (6)~~	~~3~~	~~6.0 X 10.0~~
~~GM14226-KA2~~	336826 (1) 336827 (2)	~~336814 (3)~~	~~X-468-1 (6)~~	~~3~~	6.0 X 10.0 (1) & 6.5 x 13.0 (2)
338828	336827 (1)	336814 (1)	X-468-1 (2)	1	6.5 x 13.0
343286	336827 (2)	336814 (2)	X-468-1 (4)	2	6.5 x 13.0
354117	336827 (4)	336814 (4)	X-468-1 (8)	4	6.5 x 13.0
PA-354188 PA-354188-SD	336827 (8)	336814 (8)	X-468-1 (16)	8	6.5 x 13.0
GM22299-KP1	GM22388 (2)	GM22367 (2)	X-468-1 (4)	2	20.7 x 11.0
GM28545-KP1	GM22388 (4)	GM22367 (2)	X-468-1 (8)	4	20.7 x 11.0
GM79481-KA1	–	336814 (1)	X-468-1 (2)	1	6.0 X 10.0
GM79481-KP1	–	336814 (1)	X-468-1 (2)	1	6.0 X 10.0

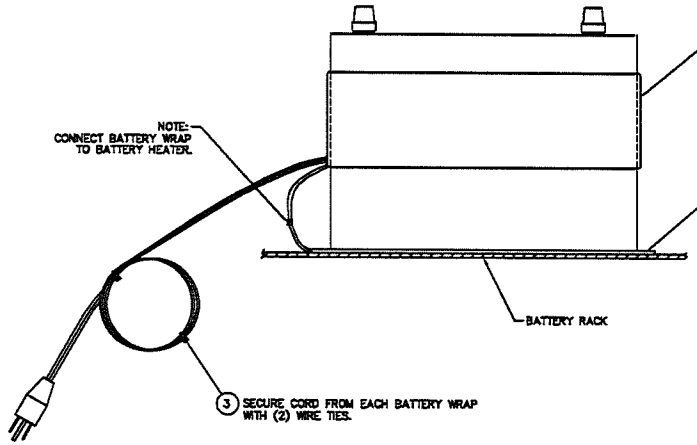

② NOTE:
PLACE (1) BATTERY HEATER WRAP AROUND
EACH BATTERY & SECURE WITH CABLE TIES
PROVIDED WITH WRAPS.

① NOTE:
PLACE (1) BATTERY HEATER PAD UNDER EACH BATTERY.
BATTERY PAD MAY EXTEND THROUGH OPENING
IN BATTERY RACK IF NECESSARY.
(ALLIGN LENGTH OF BATTERY PAD WITH LENGTH OF BATTERY.)

120 VOLT BATTERY HEATER KITS
INDUSTRIAL GENSETS

KOHLER CO.

DWG. ASSY
BATTERY HEATER

HF-273000 D

PART NO.	REV		VOLTS	WATTS	AMPS	THERMOSTAT TYPE/STYLE	REMOTE SENSOR TEMP. RANGE	TANK SENSOR TEMP RANGE	THREAD SIZE "A"	PLUG CONFIG.	LENGTH "B"	CORD TYPE	REMARKS
324930	W		120	1800	15.0	IN BLOCK/B	38°/49°C[100°/120°F]	49°/60°C[120°/140°F]	1/2 NPT	FIG-2	1575 [62.0]	1	-
324931	W		240	2000	8.3	IN BLOCK/B	38°/49°C[100°/120°F]	49°/60°C[120°/140°F]	1/2 NPT	FIG-3	1575 [62.0]	1	-
326220	W		120	1000	8.3	IN BLOCK/A	38°/49°C[100°/120°F]	49°/60°C[120°/140°F]	5/8-18 UNF 2A	FIG-1	1372 [54.0]	1	-
326221	W		240	1000	4.2	IN BLOCK/A	38°/49°C[100°/120°F]	49°/60°C[120°/140°F]	5/8-18 UNF 2A	FIG-3	1372 [54.0]	1	-
326222	W		120	1000	8.3	IN HOSE/C	27°/38°C[80°/100°F]	38°/49°C[100°/120°F]	-	FIG-1	1372 [54.0]	1	-
326224	Z		240	1000	4.2	IN HOSE/C	27°/38°C[80°/100°F]	38°/49°C[100°/120°F]	-	FIG-3	1372 [54.0]	1	-
326228	W		120	1500	12.5	IN BLOCK/A	38°/49°C[100°/120°F]	49°/60°C[120°/140°F]	1/2 NPT	FIG-1	1372 [54.0]	1	-
326229	W		240	1500	6.3	IN BLOCK/A	38°/49°C[100°/120°F]	49°/60°C[120°/140°F]	1/2 NPT	FIG-3	1372 [54.0]	1	-
326234	W		120	1800	15.0	IN BLOCK/A	38°/49°C[100°/120°F]	49°/60°C[120°/140°F]	1/2 NPT	FIG-2	1575 [62.0]	1	-
326235	W		240	2000	8.3	IN BLOCK/A	38°/49°C[100°/120°F]	49°/60°C[120°/140°F]	1/2 NPT	FIG-3	1575 [62.0]	1	-
326247	W		120	1500	12.5	IN BLOCK/A	38°/49°C[100°/120°F]	49°/60°C[120°/140°F]	5/8-18 UNF 2A	FIG-1	1372 [54.0]	1	-
326248	W		240	1500	6.3	IN BLOCK/A	38°/49°C[100°/120°F]	49°/60°C[120°/140°F]	5/8-18 UNF 2A	FIG-3	1372 [54.0]	1	-
336703	W		120	1500	12.5	IN HOSE/C	16°/27°C[60°/80°F]	38°/49°C[100°/120°F]	-	FIG-1	1372 [54.0]	1	-
352945	Y		120	1500	12.5	-	-	27°/38°C[80°/100°F]	-	FIG-1	1524 [60.0]	2	IN-BASE SENSING UNIT ONLY
352946	W		240	1500	6.3	-	-	27°/38°C[80°/100°F]	-	FIG-3	1219 [48.0]	2	IN-BASE SENSING UNIT ONLY
358311	Y		120	1000	8.3	-	-	27°/38°C[80°/100°F]	-	FIG-1	-	2	IN-BASE SENSING UNIT ONLY
358327	W		240	1000	4.2	-	-	27°/38°C[80°/100°F]	-	FIG-3	-	2	IN-BASE SENSING UNIT ONLY
GM23005	W		120	1800	15.0	IN BLOCK/D	27°/38°C[80°/100°F]	49°/60°C[120°/140°F]	28-1.25 6g METRIC	FIG-2	762 [30.0]	1	-
GM23006	W		240	2000	8.3	IN BLOCK/D	27°/38°C[80°/100°F]	49°/60°C[120°/140°F]	28-1.25 6g METRIC	FIG-3	762 [30.0]	1	-
GM24947	W		240	2000	8.3	IN BLOCK/A	38°/49°C[100°/120°F]	49°/60°C[120°/140°F]	M14-1.5 METRIC	FIG-3	1575 [62.0]	1	-
GM24948	W		120	1800	15.0	IN BLOCK/A	38°/49°C[100°/120°F]	49°/60°C[120°/140°F]	M14-1.5 METRIC	FIG-2	1575 [62.0]	1	-
GM28585	W		120	1000	8.3	-	-	27°/38°C[80°/100°F]	-	FIG-1	-	2	CORD THERMOSTAT [40°/60°F]
GM31942	Y		120	1000	8.3	IN BLOCK/A	27°/38°C[80°/100°F]	49°/60°C[120°/140°F]	1/2 NPT	FIG-1	1372 [54.0]	1	-
GM31943	Y		240	1000	4.2	IN BLOCK/A	27°/38°C[80°/100°F]	49°/60°C[120°/140°F]	1/2 NPT	FIG-3	1372 [54.0]	1	-
GM62682	Y		120	1000	8.3	-	-	27°/38°C[80°/100°F]	-	FIG-4	-	3	-
GM75552	AA		120	1800	15.0	-	-	27°/38°C[80°/100°F]	-	FIG-2	-	2	IN-BASE SENSING UNIT ONLY
GM75553	AA		240	2000	8.3	-	-	27°/38°C[80°/100°F]	-	FIG-3	-	2	IN-BASE SENSING UNIT ONLY
GM83980	AD	☐	120	1000	8.3	-	-	16°/27°C[60°/80°F]	-	FIG-1	1524 [60.0]	2	IN-BASE SENSING UNIT ONLY INCLUDES THERMOSTAT TEMPERATURE DECAL
GM83981	AB		120	1500	12.5	-	-	16°/27°C[60°/80°F]	-	FIG-1	1219 [48.0]	2	IN-BASE SENSING UNIT ONLY INCLUDES THERMOSTAT TEMPERATURE DECAL

THIS IS AN MANUAL TABLE.

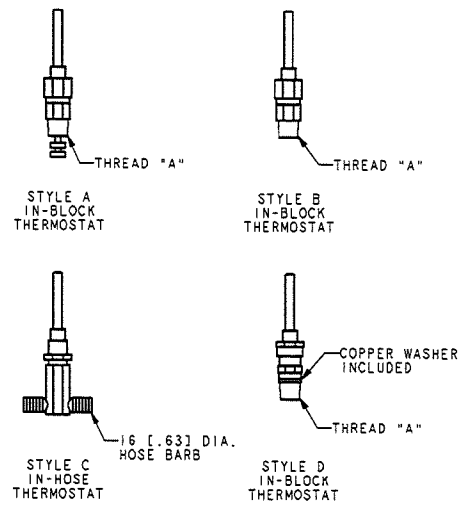

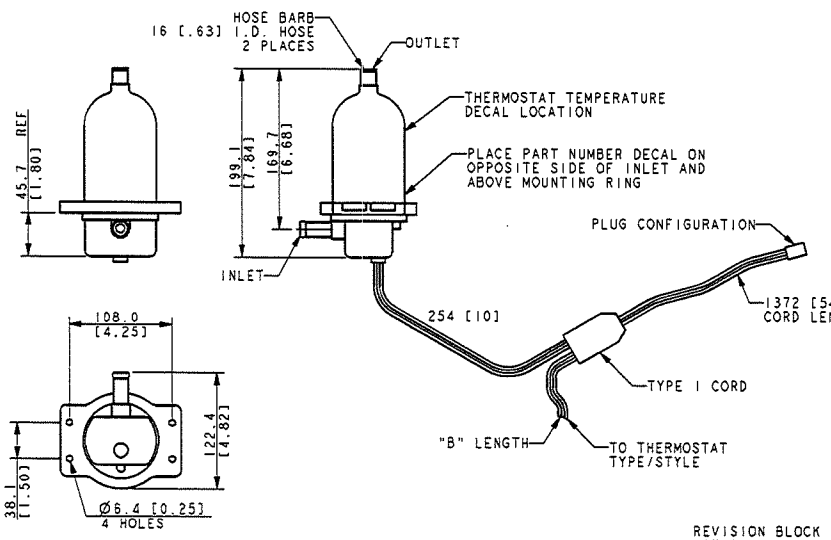

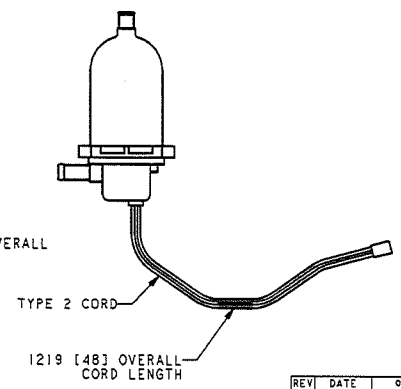

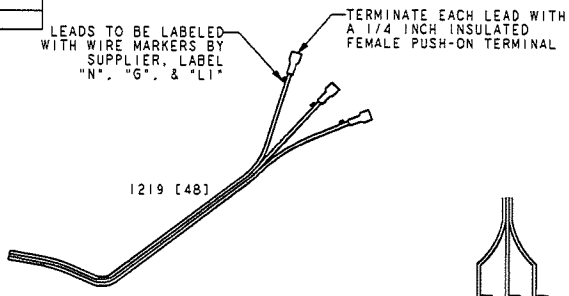

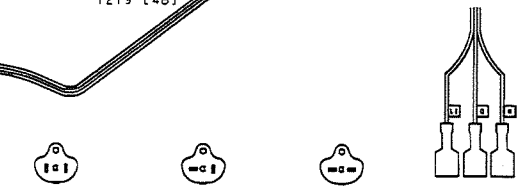

PLUG CONFIGURATION

☐ INDICATES PART NUMBERS AFFECTED BY LATEST REVISION

REVISION BLOCK INDICATES REVISION LEVEL OF DRAWING NOT PART REVISION. SEE PART REVISION LEVEL BEHIND PART NUMBER FOR CURRENT PART REVISION LEVEL.

REV	DATE	ON COMPOSITE DWGS. SEE PART NO. FOR REVISION LEVEL	BY
AC	01-09-14	(A-1) 326220-CMP WAS 326220; (C-B) 35831(AMPS	
		8.3 WAS 4.2. GM31942 AMPS 8.3 WAS 12.5; GM31943	
		AMPS 4.2 WAS 6.3; GM62682 AMPS 8.3 WAS 4.2;	
		GM83980 AMPS 8.3 WAS 4.2; (D-4) 352945 "LENGTH	
		1524 WAS 1219" [CT68393]	PAS
AD	3-11-14	(C-4) GM83980 "LENGTH" 1524 WAS 1219 [CT74793]	JNR

KOHLER OTHERWISE SPECIFIED:
1) DIMENSIONS ARE IN MILLIMETERS
2) TOLERANCES ARE:
X.XX ± 0.25
X.X ± 1.0
X ± 1.0
ANGLES ± 0° 30' MAX.
SURFACE FINISH
THIRD ANGLE PROJECTION

APPROVALS		DATE
DRAWN	SAM	9-22-11
CHECKED	CF	9-22-11
APPROVED	CF	9-22-11

KOHLER CO. METRIC PRO-E
POWER SYSTEMS, KOHLER, WI 53044 U.S.A.

THIS DRAWING IN DESIGN AND DETAIL IS KOHLER CO. PROPERTY AND MUST NOT BE USED EXCEPT IN CONNECTION WITH KOHLER CO. WORK. ALL RIGHTS OF DESIGN OR INVENTION ARE RESERVED.

TITLE: DWG, HEATER, BLOCK

SCALE 0.40 | CAD MDL | SHEET 1 of 1

DWG NO 326220-CMP | D

KIT NUMBER	BASE GRP	ITEM 1	DESCRIPTION
GM58098-KA1		358311	120V, 1000W
GM58098-KA2	GM58098-KB	358327	240V, 1000W
GM58098-KA3		352945	120V, 1500W

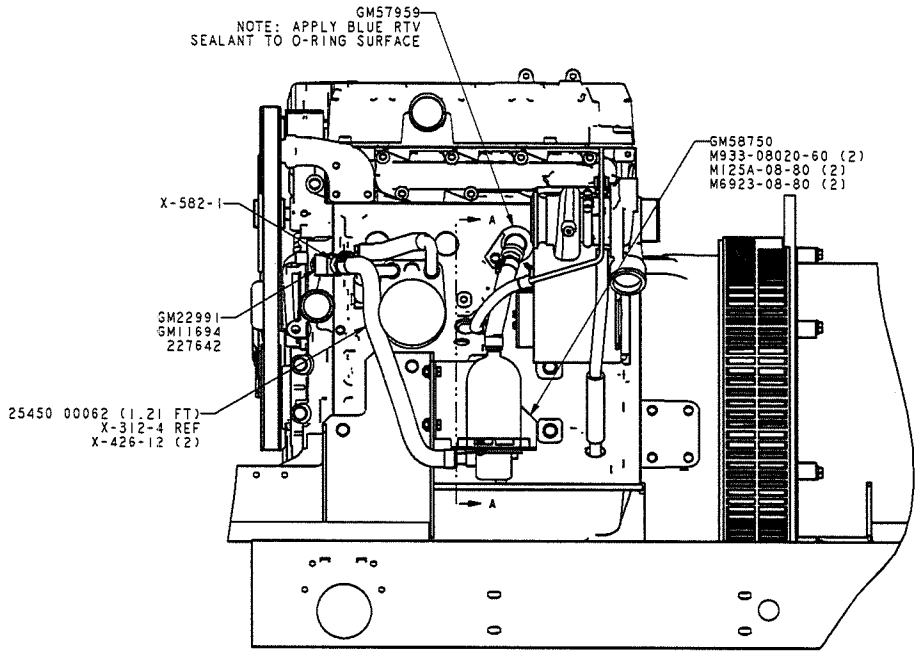

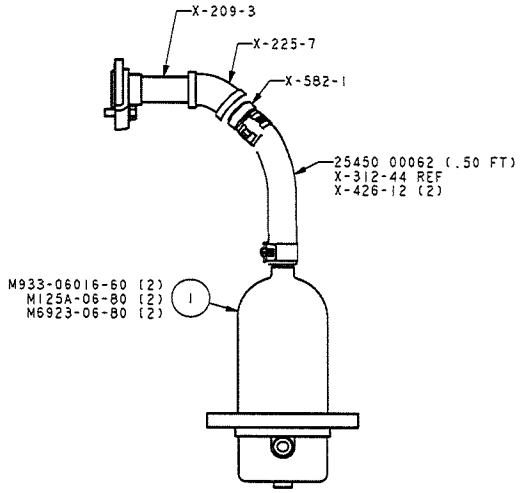

VIEW A-A
SCALE 0.5

NOTE: FOR PROPER ASSEMBLY METHOD OF HARDWARE. USE G-585 AS A GUIDELINE

BLOCK HEATER KITS
120/240V
20-80 MODELS
4024/5030 J.D. TIER III

REV	DATE	ON COMPOSITE DWGS, SEC PART NO. FOR REVISION LEVEL	BY
D	1-19-12	(D-8) GM58098-KA3 ADDED: (A-4) 1000W MOVED	
		TO (D-8) -KA1 & -KA2 [926111]	MJB
E	7-30-12	(C-2) X-209-3 WAS X-209-18, X-225-7 WAS X-211-1, X-216-20 REMOVED, (.50 FT) WAS (.25 FT) AND X-312-44 REF. WAS X-312-45 REF. [CT19524]	GFR
F	7-12-13	(B-3) M933-06016-60 (2), M125A-06-80 (2) & M6923-06-80 (2)	
		WAS M933-06016-60 (4), M125A-06-80 (4) & M6923-06-80 (4)	
		[CT52390]	SVP

UNLESS OTHERWISE SPECIFIED -
1) DIMENSIONS ARE IN MILLIMETERS
FI TOLERANCES ARE:
1.XX ± 0.25
1.X ± 1.0
1 ± 1.0
ANGLES ± 0° 30'
SURFACE FINISH 125 MAX.
THIRD ANGLE PROJECTION

APPROVALS		DATE
DRAWN	RAC	9-13-07
CHECKED	CWF	9-13-07
APPROVED	SLJ	9-13-07

KOHLER CO. METRIC | PRO-E
POWER SYSTEMS, KOHLER, WI 53044 U.S.A.

THIS DRAWING IN DESIGN AND DETAIL IS KOHLER CO. PROPERTY AND MUST NOT BE USED EXCEPT IN CONNECTION WITH KOHLER CO. WORK. ALL RIGHTS OF DESIGN OR INVENTION ARE RESERVED.

TITLE **DWG, ASSY BLOCK HEATER**

SCALE 0.30 | CAT NO. | SHEET 1 of 1
DWG NO. **GM58098** | D

PART NO.	PART REV		DESCRIPTION	AMPS	INTERRUPT kA ~480 VAC	CONNECTION TYPE LINE	CONNECTION TYPE LOAD	POLES	RATING	TRIP TYPE	MAG TRIP ONLY FULL LOAD AMPS	MAG TRIP ONLY ADJUSTABLE TRIP RANGE	SQUARE D PART NO.
GM47476-1	B		BREAKER, CIRCUIT 175A JDL	175	18	AL175JD LUGS	AL175JD LUGS	3	80%	THERMAL MAGNETIC	-	-	JDL36175
GM47476-8	C		BREAKER, CIRCUIT 175A JDP		18	TERMINAL NUTS	AL175JD LUGS	3	80%	THERMAL MAGNETIC	-	-	JDP36175TX
GM47476-7	C		BREAKER, CIRCUIT 175A JDP		18	TERMINAL NUTS	CU250JD LUGS	3	100%	THERMAL MAGNETIC	-	-	JDP36175CTX
GM47476-27	-	□	BREAKER, CIRCUIT 175A JDP		18	TERMINAL NUTS	CU250JD LUGS	2	100%	THERMAL MAGNETIC	-	-	JDP26175CTX
GM47476-2	B		BREAKER, CIRCUIT 200A JDL	200	18	AL250JD LUGS	AL250JD LUGS	3	80%	THERMAL MAGNETIC	-	-	JDL36200
GM47476-5	B		BREAKER, CIRCUIT 200A JDP		18	TERMINAL NUTS	CU250JD LUGS	2	100%	THERMAL MAGNETIC	-	-	JDP26200CTX
GM47476-8	C		BREAKER, CIRCUIT 200A JDP		18	TERMINAL NUTS	AL250JD LUGS	3	80%	THERMAL MAGNETIC	-	-	JDP36200TX
GM47476-9	C		BREAKER, CIRCUIT 200A JDP		18	TERMINAL NUTS	CU250JD LUGS	3	100%	THERMAL MAGNETIC	-	-	JDP36200CTX
GM47476-3	B		BREAKER, CIRCUIT 225A JDL	225	18	AL250JD LUGS	AL250JD LUGS	3	80%	THERMAL MAGNETIC	-	-	JDL36225
GM47476-10	C		BREAKER, CIRCUIT 225A JDP		18	TERMINAL NUTS	AL250JD LUGS	3	80%	THERMAL MAGNETIC	-	-	JDP36225TX
GM47476-11	C		BREAKER, CIRCUIT 225A JDP		18	TERMINAL NUTS	CU250JD LUGS	3	100%	THERMAL MAGNETIC	-	-	JDP36225CTX
GM47476-4	B		BREAKER, CIRCUIT 250A JDL	250	18	AL250JD LUGS	AL250JD LUGS	3	80%	THERMAL MAGNETIC	-	-	JDL36250
GM47476-12	C		BREAKER, CIRCUIT 250A JDP		18	TERMINAL NUTS	AL250JD LUGS	3	80%	THERMAL MAGNETIC	-	-	JDP36250TX
GM47476-13	C		BREAKER, CIRCUIT 250A JDP		18	TERMINAL NUTS	CU250JD LUGS	3	100%	THERMAL MAGNETIC	-	-	JDP36250CTX
GM47476-14	C		BREAKER, CIRCUIT 250A JJP		65	TERMINAL NUTS	AL250JD LUGS	3	-	MAGNETIC ONLY	114-217	684-2500	JJP36250M75TX
GM47476-15	-		BREAKER, CIRCUIT 250A JDP		18	TERMINAL NUTS	AL250JD LUGS	3	80%	MICROLOGIC 3.2 LI	-	-	JDP36250U31XTX
GM47476-16	-		BREAKER, CIRCUIT 250A JDP		18	TERMINAL NUTS	AL250JD LUGS	3	80%	MICROLOGIC 3.2S LSI	-	-	JDP36250U33XTX
GM47476-17	-		BREAKER, CIRCUIT 250A JDP		18	TERMINAL NUTS	AL250JD LUGS	3	80%	MICROLOGIC 6.2A LSIG	-	-	JDP36250U44XTX
GM47476-18	-		BREAKER, CIRCUIT 250A JDP		18	TERMINAL NUTS	CU250JD LUGS	3	100%	MICROLOGIC 3.2 LI	-	-	JDP36250CU31XTX
GM47476-19	-		BREAKER, CIRCUIT 250A JDP		18	TERMINAL NUTS	CU250JD LUGS	3	100%	MICROLOGIC 3.2S LSI	-	-	JDP36250CU33XTX
GM47476-20	-		BREAKER, CIRCUIT 250A JDP		18	TERMINAL NUTS	CU250JD LUGS	3	100%	MICROLOGIC 6.2A LSIG	-	-	JDP36250CU44XTX
GM47476-21	-		BREAKER, CIRCUIT 250A JGP		35	TERMINAL NUTS	AL250JD LUGS	3	80%	MICROLOGIC 3.2 LI	-	-	JGP36250U31XTX
GM47476-22	-		BREAKER, CIRCUIT 250A JGP		35	TERMINAL NUTS	AL250JD LUGS	3	80%	MICROLOGIC 3.2S LSI	-	-	JGP36250U33XTX
GM47476-23	-		BREAKER, CIRCUIT 250A JGP		35	TERMINAL NUTS	AL250JD LUGS	3	80%	MICROLOGIC 6.2A LSIG	-	-	JGP36250U44XTX
GM47476-24	-		BREAKER, CIRCUIT 250A JGP		35	TERMINAL NUTS	CU250JD LUGS	3	100%	MICROLOGIC 3.2 LI	-	-	JGP36250CU31XTX
GM47476-25	-		BREAKER, CIRCUIT 250A JGP		35	TERMINAL NUTS	CU250JD LUGS	3	100%	MICROLOGIC 3.2S LSI	-	-	JGP36250CU33XTX
GM47476-26	-		BREAKER, CIRCUIT 250A JGP		35	TERMINAL NUTS	CU250JD LUGS	3	100%	MICROLOGIC 6.2A LSIG	-	-	JGP36250CU44XTX

◆ DENOTES A CRITICAL CHARACTERISTIC THAT MUST BE ADDRESSED IN THE PRODUCTION CONTROL PLAN. TOTAL QUANTITY OF CRITICAL CHARACTERISTICS ON THIS DRAWING = 0

◇ DENOTES A MAJOR CHARACTERISTIC THAT MUST BE ADDRESSED IN THE PRODUCTION CONTROL PLAN. TOTAL QUANTITY OF MAJOR CHARACTERISTICS ON THIS DRAWING = 0

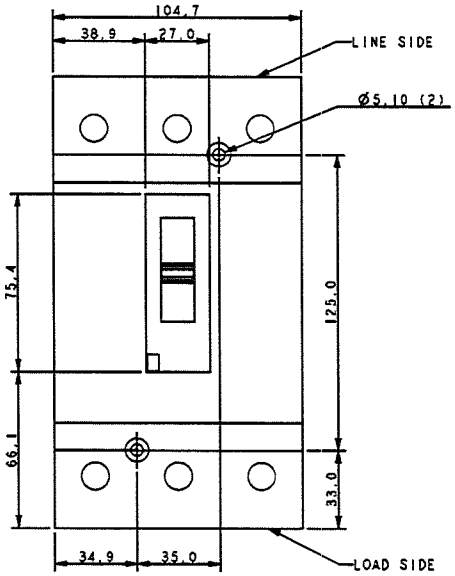

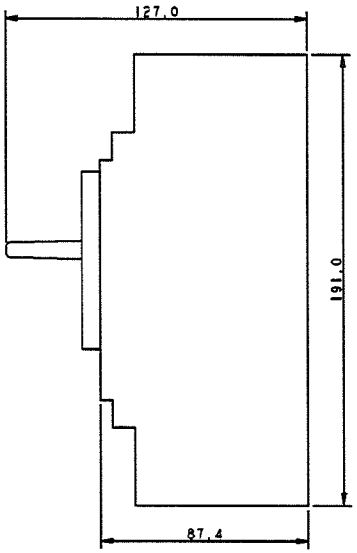

CONNECTION CHART		
CONNECTION TYPE	CONNECTION (PER PHASE)	TORQUE
AL175JD LUGS	(1) #4-4/0 AL/CU	25 Nm [225 IN-LB]
AL250JD LUGS	(1) 3/0-350 KCMIL AL/CU	25 Nm [225 IN-LB]
CU250JD LUGS	(1) 1/0-300 KCMIL (CU 90°C WIRE ONLY)	28 Nm [250 IN-LB]
TERMINAL NUTS	(1) M8	9-10.2 Nm [80-90 IN-LB]

NOTE: 2-POLE BREAKERS HAVE AN UNPOPULATED CENTER POLE.

KOHLER PART NUMBER TO BE CLEARLY VISIBLE ON CIRCUIT BREAKER AND ON INDIVIDUAL PACKAGING.

□ INDICATES PART NUMBERS AFFECTED BY LATEST DRAWING REVISION

SQUARE D J-FRAME 600V

REV	DATE	ON COMPOSITE DWGS. SEE PART NO. FOR REVISION LEVEL	BY
-	10-21-05	NEW DRAWING [78677]	RAC
A	12-18-06	(D-4) JDL WAS JDP (4 PLACES), LUG DATA ADDED; [78677]	WSD
B	11-16-10	REDRAWN IN PRO-E & CHART UPDATED, GM47476-5 ADDED; [90604-1]	BTW
C	1-6-11	GM47476-6 THRU -14 ADDED [90647-15]	WSD
D	4-13-12	GM47476-15 THRU -26 ADDED; (A-1) GM47476-CMP WAS GM47476 [CT14516]	WSD
E	12-6-13	(D-8) GM47476-27 ADDED [CT66339]	WSD

UNLESS OTHERWISE SPECIFIED - (1) DIMENSIONS ARE IN MILLIMETERS (2) TOLERANCES ARE: X.XX ± 0.5; X.X ± 0.5; X ± 0.5; ANGLES ± 0.5° SURFACE FINISH MAX.

TRUE POSITION TOLERANCE

APPROVALS		DATE
DRAWN	RAC	10-21-05
CHECKED	JMS	6-13-06
APPROVED	SLJ	6-15-06

KOHLER CO. [METRIC] PRO-E

POWER SYSTEMS, KOHLER, WI 53044 U.S.A.

THIS DRAWING IN DESIGN AND DETAIL IS KOHLER CO. PROPERTY AND MUST NOT BE USED EXCEPT IN CONNECTION WITH KOHLER CO. WORK. ALL RIGHTS OF DESIGN OR INVENTION ARE RESERVED.

TITLE: DWG, CIRCUIT BREAKER

SCALE | CAD WL | SHEET 1 of 1

DWG NO. GM47476-CMP | D

KOHLER POWER SYSTEMS

Warranty

Stationary Standby and Prime Power Industrial Generator Set One-Year or Two Thousand (2000)-Hour Limited Warranty

Your Kohler product has been manufactured and inspected with care by experienced craftsmen. If you are the original end user, Kohler Co. warrants, for the period indicated below, each product to be free from defects in materials and workmanship. In the event of a defect in materials or workmanship, Kohler Co. will repair, replace, or make appropriate adjustment at Kohler Co.'s option if the product, upon Kohler Co.'s inspection, is found to be properly installed, maintained, and operated in accordance with Kohler Co.'s instruction manuals. A Kohler distributor, dealer, or authorized service representative must perform startup.

Kohler Product	Warranty Coverage
Stationary Standby Generator Set & Accessories	One (1) year from registered startup or two thousand (2000) hours (whichever occurs first). In any event, the warranty period will expire not later than thirty (30) months from the date of shipment from Kohler Co.'s factory.
Stationary Prime Power Generator Set & Accessories	One (1) year from registered startup or two thousand (2000) hours (whichever occurs first). In any event, the warranty period will expire not later than thirty (30) months from the date of shipment from Kohler Co.'s factory.

The following will **not** be covered by the warranty:

1. Normal engine wear, routine tuneups, tuneup parts, adjustments, and periodic service.
2. Damage caused by accidents, improper installation or handling, faulty repairs not performed by an authorized Kohler service representative, or improper storage.
3. Damage caused by operation with improper fuel or at speeds, loads, conditions, modifications, or installation contrary to published specifications or recommendations.
4. Damage caused by negligent maintenance such as:
   a. Failure to provide the specified type and sufficient quantity of lubricating oil.
   b. Failure to keep the air intake and cooling fin areas clean.
   c. Failure to service the air cleaner.
   d. Failure to provide sufficient coolant and/or cooling air.
   e. Failure to perform scheduled maintenance as prescribed in supplied manuals.
   f. Failure to regularly exercise the generator set under load (stationary applications only).
5. Original installation charges and startup costs.
6. Starting batteries and the following related expenses:
   a. Labor charges related to battery service.
   b. Travel expense related to battery service.
7. Engine coolant heaters, heater controls, and circulating pumps after the first year.
8. Additional expenses for repair after normal business hours, i.e. overtime or holiday labor rates.
9. Rental of equipment during performance of warranty repairs.
10. Removal and replacement of non-Kohler-supplied options and equipment.
11. Replacement of a failed Kohler part with a non-Kohler part voids the warranty on that part.
12. Radiators replaced rather than repaired.
13. Fuel injection pumps not repaired by an authorized Kohler service representative.
14. Non-Kohler-authorized repair shop labor without prior approval from Kohler Co. Warranty Department.
15. Engine fluids such as fuel, oil, or coolant/antifreeze.
16. Shop supplies such as adhesives, cleaning solvents, and rags.
17. Expenses incurred investigating performance complaints unless the problem is caused by defective Kohler materials or workmanship.
18. Maintenance items such as fuses, lamps, filters, spark plugs, loose or leaking clamps, and adjustments.
19. Travel time and mileage exceeding 300 miles round trip.

To obtain warranty service, call 1-800-544-2444 for your nearest authorized Kohler service representative or write Kohler Co., Kohler Power Systems Service Department, MS072, Kohler, WI 53044 USA.

KOHLER CO. SHALL NOT BE LIABLE FOR SPECIAL, INCIDENTAL, AND/OR CONSEQUENTIAL DAMAGES OF ANY KIND including, but not limited to, incidental and/or consequential labor costs, installation charges, telephone charges, or transportation charges in connection with the replacement or repair of defective parts.

This is our exclusive written warranty. We make no other express warranty nor is anyone authorized to make any on our behalf.

ANY IMPLIED OR STATUTORY WARRANTY, INCLUDING ANY WARRANTY OF MERCHANTABILITY OR FITNESS FOR A PARTICULAR PURPOSE, IS EXPRESSLY LIMITED TO THE DURATION OF THIS WARRANTY. Some states do not allow limitations on how long an implied warranty lasts, or the exclusion or limitation of incidental and/or consequential damages, so the above limitation or exclusion may not apply to you.

This warranty gives you specific legal rights, and you may also have other rights which vary from state to state.

KOHLER®
Power Systems

KOHLER CO. Kohler, Wisconsin 53044
Phone 920-457-4441, Fax 920-459-1646
For the nearest sales/service outlet in the US and Canada, phone 1-800-544-2444
KOHLERPower.com

TP-5374 8/13d

Stationary Standby Industrial Generator Set Extended Two-Year or Two Thousand (2000)-Hour Limited Warranty

Your Kohler product has been manufactured and inspected with care by experienced craftsmen. If you are the original end user, Kohler Co. warrants, for the period indicated below, each product to be free from defects in materials and workmanship. In the event of a defect in materials or workmanship, Kohler Co. will repair, replace, or make appropriate adjustment at Kohler Co.'s option if the product, upon Kohler Co.'s inspection, is found to be properly installed, maintained, and operated in accordance with Kohler Co.'s instruction manuals. A Kohler distributor, dealer, or authorized service representative must perform startup.

Kohler Product	Warranty Coverage
Stationary Standby Generator Set & Accessories	Two (2) years from registered startup or two thousand (2000) hours (whichever occurs first).

This warranty is not effective unless a proper extended warranty registration form and warranty fee have been sent to Kohler Co. within one year of registered startup. The extended warranty start date is determined by the standard warranty requirements and runs concurrent with the standard warranty during the first year. To receive extended warranty coverage, the provisions of the standard warranty registration must be met.

The following will **not** be covered by the warranty:

1. Normal engine wear, routine tuneups, tuneup parts, adjustments, and periodic service.
2. Damage caused by accidents, improper installation or handling, faulty repairs not performed by an authorized Kohler service representative, or improper storage.
3. Damage caused by operation with improper fuel or at speeds, loads, conditions, modifications, or installation contrary to published specifications or recommendations.
4. Damage caused by negligent maintenance such as:
   a. Failure to provide the specified type and sufficient quantity of lubricating oil.
   b. Failure to keep the air intake and cooling fin areas clean.
   c. Failure to service the air cleaner.
   d. Failure to provide sufficient coolant and/or cooling air.
   e. Failure to perform scheduled maintenance as prescribed in supplied manuals.
   f. Failure to regularly exercise the generator set under load (stationary applications only).
5. Original installation charges and startup costs.
6. Starting batteries and the following related expenses:
   a. Labor charges related to battery service.
   b. Travel expense related to battery service.
7. Engine coolant heaters, heater controls, and circulating pumps after the first year.
8. Additional expenses for repair after normal business hours, i.e. overtime or holiday labor rates.
9. Rental of equipment during performance of warranty repairs.
10. Removal and replacement of non-Kohler-supplied options and equipment.
11. Replacement of a failed Kohler part with a non-Kohler part voids the warranty on that part.
12. Radiators replaced rather than repaired.
13. Fuel injection pumps not repaired by an authorized Kohler service representative.
14. Non-Kohler-authorized repair shop labor without prior approval from Kohler Co. Warranty Department.
15. Engine fluids such as fuel, oil, or coolant/antifreeze.
16. Shop supplies such as adhesives, cleaning solvents, and rags.
17. Expenses incurred investigating performance complaints unless the problem is caused by defective Kohler materials or workmanship.
18. Maintenance items such as fuses, lamps, filters, spark plugs, loose or leaking clamps, and adjustments.
19. Travel time and mileage exceeding 300 miles round trip.

To obtain warranty service, call 1-800-544-2444 for your nearest authorized Kohler service representative or write Kohler Co., Kohler Power Systems Service Department, MS072, Kohler, WI 53044 USA.

KOHLER CO. SHALL NOT BE LIABLE FOR SPECIAL, INCIDENTAL, AND/OR CONSEQUENTIAL DAMAGES OF ANY KIND including, but not limited to, incidental and/or consequential labor costs, installation charges, telephone charges, or transportation charges in connection with the replacement or repair of defective parts.

This is our exclusive written warranty. We make no other express warranty nor is anyone authorized to make any on our behalf.

ANY IMPLIED OR STATUTORY WARRANTY, INCLUDING ANY WARRANTY OF MERCHANTABILITY OR FITNESS FOR A PARTICULAR PURPOSE, IS EXPRESSLY LIMITED TO THE DURATION OF THIS WARRANTY. Some states do not allow limitations on how long an implied warranty lasts, or the exclusion or limitation of incidental and/or consequential damages, so the above limitation or exclusion may not apply to you.

This warranty gives you specific legal rights, and you may also have other rights which vary from state to state.

KOHLER®
Power Systems

KOHLER CO. Kohler, Wisconsin 53044
Phone 920-457-4441, Fax 920-459-1646
For the nearest sales/service outlet in the US and Canada, phone 1-800-544-2444
KOHLERPower.com

TP-5497 8/13d

KOHLER POWER SYSTEMS

Certification

Certificate US95/0189

The management system of

Kohler Power Systems Americas

N7650 CountyRoad LS (Known as Mosel Plant)
Sheboygan, WI, 53083, United States

has been assessed and certified as meeting the requirements of

ISO 9001:2008

For the following activities

Design, manufacture, and distributor support for electrical generators, alternators, automatic transfer switches, and switchgear.

Further clarifications regarding the scope of this certificate and the applicability of ISO 9001:2008 requirements may be obtained by consulting the organization

This certificate is valid from 16 November 2012 until 16 November 2015 and remains valid subject to satisfactory surveillance audits. Recertification audit due a minimum of 60 days before the expiration date. Issue 9 : 14 November 2012. Certified since February 1995.

Multiple certificates have been issued for this scope.
The main certificate is numbered US95/0189
This is a multi-site certification.
Additional site details are listed on subsequent page.

Authorized by

Zachary C. Pivarnik
Director of Accreditation, North America

Systems and Services Certification, a Division of SGS North America, Inc.
201 Route 17 North, Rutherford, NJ 07070, United States of America
t +1 201 508 3000 f +1 201 925 4555 www.us.sgs.com

This certificate remains the property of SGS and shall be returned upon request.

This document is issued by the Company subject to its General Conditions of Certification Services accessible at www.sgs.com/terms_and_conditions.htm. Attention is drawn to the limitations of liability, indemnification and jurisdictional issues established therein. The authenticity of this document may be verified at http://www.sgs.com/en/Our-Company/Certified-Client-Directories/Certified-Client-Directories.aspx. Any unauthorized alteration, forgery or falsification of the content or appearance of this document is unlawful and offenders may be prosecuted to the fullest extent of the law.

Kohler Power Systems Americas

ISO 9001:2008

Issue 9 : 14 November 2012

Additional facilities:

300 N. Dekora Woods Blvd. (Known as Sauk)
Saukville, WI 53080, United States

Scope: Manufacturer of fuel tanks, skids, fabricated components, enclosures, and assembly of enclosures and generators

4327 County EE (Known as KWIP Warehouse)
Sheboygan, WI 53081, United States

Scope: Receiving and storage of generator components & receiving and shipping of generator sets.

This document is issued by the Company subject to its General Conditions of Certification Services accessible at www.sgs.com/terms_and_conditions.htm. Attention is drawn to the limitations of liability, indemnification and jurisdictional issues established therein. The authenticity of this document may be verified at http://www.sgs.com/en/Our-Company/Certified-Client-Directories/Certified-Client-Directories.aspx. Any unauthorized alteration, forgery or falsification of the content or appearance of this document is unlawful and offenders may be prosecuted to the fullest extent of the law.

Kohler Standby/Prime Generator Set Test Program

Testing is an integral part of quality assurance. In keeping with our uncompromising commitment to quality, safety, and reliability, every Kohler Standby/Prime power generator set undergoes an extensive series of prototype and production testing.

Prototype Testing

Prototype testing includes the potentially destructive tests necessary to verify design, proper function of protective devices and safety features, and reliability expectations. Kohler's prototype testing includes the following:

- Alternator temperature rise test per NEMA MG1-32.6. Standby and prime ratings of the alternator are established during this test.
- Maximum power test to assure that the prime mover and alternator have sufficient capacity to operate within specifications.
- Alternator overload test per NEMA MG1-32.8.
- Steady-state load test to ensure voltage regulation meets or exceeds ANSI C84.1, NEMA MG1-32.17 requirements and to verify compliance with steady-state speed control specifications.
- Transient test to verify speed controls meets or exceeds specifications.
- Transient load tests per NEMA MG1-32.18, and ISO 8528 to verify specifications of transient voltage regulation, voltage dip, voltage overshoot, recovery voltage, and recovery time.
- Motor starting tests per NEMA MG1-32.18.5 to evaluate capabilities of generator, exciter, and regulator system.
- Three-phase symmetrical short-circuit test per NEMA MG1-32.13 to demonstrate short circuit performance, mechanical integrity, ability to sustain short-circuit current.
- Harmonic analysis, voltage waveform deviation per NEMA MG1-32.10 to confirm that the generator set is producing clean voltage within acceptable limits.
- Generator set cooling and air flow tests to verify maximum operating ambient temperature.
- Reliability tests to demonstrate product durability, followed by root cause analysis of discovered failures and defects. Corrective action is taken to improve the design, workmanship, or components.
- Acoustical noise intensity and sound attenuation effects tests.

Production Testing

In production, Kohler Standby/Prime generator sets are built to the stringent standards established by the prototype program. Every Kohler Generator set is fully tested prior to leaving the factory. Production testing includes the following:

- Stator and exciter winding high-potential test on all generators. Surge transient tests on stators for generators 180 kW or larger. Continuity and balance tests on all rotors.
- One-step, full-load pickup tests to verify that the performance of each generator set, regulator, and governor meets published specifications.
- Regulation and stability of voltage and frequency are tested and verified at no load, 1/4 load, 1/2 load, 3/4 load, and full-rated load.
- Voltage, amperage, frequency and power output ratings verified by full-load test.
- The proper operation of controller logic circuitry, prealarm warnings, and shutdown functions is tested and verified.
- Any defect or variation from specification discovered during testing is corrected and retested prior to approval for shipment to the customer.

Torsional analysis data, to verify torsional effects are not detrimental and that the generator set will provide dependable service as specified, is available upon request.

Kohler offers other testing at the customer's request at an additional charge. These optional tests include power factor testing, customized load testing for specific application, witness testing, and a broad range of MIL-STD-705c testing. A certified test report is also available at an additional charge.

KOHLER®
POWER SYSTEMS

KOHLER CO. Kohler, Wisconsin 53044
Phone 920-565-3381, Fax 920-459-1646
For the nearest sales/service outlet in the US and Canada, phone 1-800-544-2444
KohlerPowerSystemscom

G18-56 12/05a

KOHLER POWER SYSTEMS

Prestartup Checklist

Generator Set/Transfer Switch Installation Checklist

This document has generic content and some items may not apply to some applications. Check only the items that apply to the specific application. Read and understand all of the safety precautions found in the Operation and Installation Manuals. Make the following installation checks before performing the Startup Checklist.

Note: Use this form as a general guide, along with any applicable codes or standards. Comply with all applicable codes and standards. Improper installation voids the warranty.

Equipment Room or Weather Housing

Yes	Does Not Apply		
☐	☐	1.	Is the equipment installed in a fire-resistant room (made of non-combustible material) or in an outdoor weather housing?
☐	☐	2.	Is there adequate clearance between the engine and floor for service maintenance?
☐	☐	3.	Is there emergency lighting available at the equipment room or weather housing?
☐	☐	4.	Is there adequate heating for the equipment room or outdoor weather housing?
☐	☐	5.	Is the equipment room clean with all materials not related to the emergency power supply system removed?
☐	☐	6.	Is the equipment room protected with a fire protection system?

Engine and Mounting

☐	☐	7.	Is the mounting surface(s) properly constructed and leveled?
☐	☐	8.	Is the mounting surface made from non-combustible material?
☐	☐	9.	Was the generator-to-engine alignment performed after attaching the skid to the mounting base? Generator sets with two-bearing generators require alignment.

Lubrication

☐	☐	10.	Is the engine crankcase filled with the specified oil?

Cooling and Ventilation

☐	☐	11.	Is the cooling system filled with the manufacturer's specified coolant/antifreeze and purged of air?
☐	☐	12.	Is there adequate inlet and outlet air flow (electric louvers adjusted and ventilation fan motor(s) connected to the corresponding voltage)?
☐	☐	13.	Is the radiator duct properly sized and connected to the air vent or louver?
☐	☐	14.	Are flexible sections installed in the cooling water lines?

Fuel

☐	☐	15.	Is there an adequate/dedicated fuel supply?
☐	☐	16.	Are the fuel filters installed?
☐	☐	17.	Are the fuel tanks and piping installed in accordance with applicable codes and standards?
☐	☐	18.	Is there adequate fuel transfer tank pump lift capacity and is the pump motor connected to the corresponding voltage?
☐	☐	19.	Is the fuel transfer tank pump connected to the emergency power source?
☐	☐	20.	Are flexible fuel lines installed between the engine fuel inlet and fuel piping?
☐	☐	21.	Is the specified gas pressure available at the fuel regulator inlet?
☐	☐	22.	Does the gas solenoid valve function?
☐	☐	23.	Are the manually operated fuel and cooling water valves installed allowing manual operation or bypass of the solenoid valves?

Exhaust

Yes	Does Not Apply		
☐	☐	24.	Is the exhaust line sized per guidelines and does it have flexible connector(s)? Is the flexible connector(s) straight?
☐	☐	25.	Is there an exhaust line condensate trap with a drain installed?
☐	☐	26.	Is the specified silencer installed and are the hanger and mounting hardware tightened?
☐	☐	27.	Is a heat-isolating thimble(s) installed at points where exhaust lines pass through combustible wall(s) or partition(s)?
☐	☐	28.	Is the exhaust line free of excessive bends and restrictions? Is the backpressure within specifications?
☐	☐	29.	Is the exhaust line installed with a downward pitch toward the outside of the building?
☐	☐	30.	Is the exhaust line protected from entry by rain, snow, and animals?
☐	☐	31.	Does the exhaust system outlet location prevent entry of exhaust gases into buildings or structures?
☐	☐	32.	Are individuals protected from exposure to high temperature exhaust parts and are hot parts safety decals present?

AC Electrical System

☐	☐	33.	Does the nameplate voltage/frequency of the generator set and transfer switch match normal/utility source ratings?
☐	☐	34.	Do the generator set load conductors have adequate ampacity and are they correctly connected to the circuit breakers and/or the emergency side of the transfer switch?
☐	☐	35.	Are the load conductors, engine starting cables, battery charger cables, and remote annunciator leads installed in separate conduits?
☐	☐	36.	Is the battery charger AC circuit connected to the corresponding voltage?

Transfer Switch, Remote Control System, Accessories

☐	☐	37.	Is the transfer switch mechanism free of binding? **Note:** Disconnect all AC sources and operate the transfer switch manually.
☐	☐	38.	Are the transfer switch AC conductors correctly connected? Verify lead designations using the appropriate wiring diagrams.
☐	☐	39.	Is all other wiring connected, as required?

Batteries and DC Electrical System

☐	☐	40.	Does the battery(ies) have the specified CCA rating and voltage?
☐	☐	41.	Is the battery(ies) filled with electrolyte and connected to the battery charger?
☐	☐	42.	Are the engine starting cables connected to the battery(ies)?
☐	☐	43.	Do the engine starting cables have adequate length and gauge?
☐	☐	44.	Is the battery(ies) installed with adequate air ventilation?
☐	☐	45.	Are the ends of all spark plug wires properly seated onto the coil/distributor and the spark plug?

Special Requirements

☐	☐	46.	Is the earthquake protection adequate for the equipment and support systems?
☐	☐	47.	Is the equipment protected from lightning damage?

Generator Set/Transfer Switch Startup Checklist

This document has generic content and some items may not apply to some applications. Check only the items that apply to the specific application. Read and understand all of the safety precautions found in the Operation and Installation Manuals. Complete the Installation Checklist before performing the initial startup checks. Refer to Service Bulletin 616 for Warranty Startup Procedure Requirements regarding generator set models with ECM-controlled engines.

Yes	Does Not Apply		
❑	❑	1.	Verify that the engine is filled with oil and the cooling system is filled with coolant/antifreeze.
❑	❑	2.	Prime the fuel system.
❑	❑	3.	Open all water and fuel valves. Temporarily remove the radiator cap to eliminate air in the cooling system. Replace radiator cap in step 21.
❑	❑	4.	Place the generator set master switch in the OFF/RESET position. Observe Not-in-Auto lamp and alarm, if equipped, on the controller.
❑	❑	5.	Press the lamp test, if equipped on controller. Do all the alarm lamps on the panel illuminate?
❑	❑	6.	Open the main line circuit breakers, open the safeguard breaker, and/or remove fuses connected to the generator set output leads.
❑	❑	7.	Turn down the speed control (electronic governor) or speed screw (mechanical governor).*
❑	❑	8.	Verify the presence of lube oil in the turbocharger, if equipped. See the engine and/or generator set operation manual.
❑	❑	9.	Place the generator set master switch in the RUN position. Allow the engine to start and run for several seconds.
❑	❑	10.	Verify that the day tank, if equipped, is energized.
❑	❑	11.	Place the generator set master switch in the OFF/RESET position. Check for oil, coolant, and exhaust leaks.
❑	❑	12.	Turn on the water/oil heaters and fuel lift pumps.
❑	❑	13.	Check the battery charger ammeter for battery charging indication.
❑	❑	14.	Place the generator set master switch in the RUN position. Verify whether there is sufficient oil pressure. Check for oil, coolant, and exhaust leaks.
❑	❑	15.	Close the safeguard circuit breaker. Adjust the engine speed to 50/60 Hz if equipped with an electronic governor or to 52.8/63 Hz if equipped with a mechanical governor.*
❑	❑	16.	If the speed is unstable, adjust according to the appropriate engine and/or governor manual.*
❑	❑	17.	Adjust the AC output voltage to match the load voltage using the voltage adjusting control. See the generator set/controller operation manual.
❑	❑	18.	Allow the engine to reach normal operating coolant temperature.
❑	❑	19.	Check the operating temperature on city water-cooled models and adjust the thermostatic valve as necessary.
❑	❑	20.	Manually overspeed the engine to cause an engine shutdown (68-70 Hz on 60 Hz models and 58-60 Hz on 50 Hz models). Place the generator set master switch in the OFF/RESET position.*
❑	❑	21.	Check the coolant level, add coolant as necessary, and replace the radiator cap. Verify that all hose clamps are tight and secure.
❑	❑	22.	Place the generator set master switch in the RUN position.
❑	❑	23.	Verify the engine low oil pressure and high coolant temperature shutdowns.*
❑	❑	24.	Check the overcrank shutdown.*
❑	❑	25.	Place the generator set master switch in the OFF/RESET position.
❑	❑	26.	Open the normal source circuit breaker or remove fuses to the transfer switch.
❑	❑	27.	Disconnect the power switching device and logic controller wire harness at the inline disconnect plug at the transfer switch.
❑	❑	28.	Manually transfer the load to the emergency source.
❑	❑	29.	Close the normal source circuit breaker or replace fuses to the transfer switch.
❑	❑	30.	Check the normal source voltage, frequency, and phase sequence on three-phase models. The normal source must match the load.
❑	❑	31.	Open the normal source circuit breaker or remove fuses to the transfer switch.
❑	❑	32.	Manually transfer the load to the normal source.
❑	❑	33.	Close the generator set main line circuit breakers, close the safeguard breaker, and/or replace the fuses connected to the transfer switch.
❑	❑	34.	Place the generator set master switch in the RUN position.
❑	❑	35.	Check the generator set voltage, frequency, and phase sequence on three-phase models. The generator set must match normal source and load.
❑	❑	36.	Place the generator set master switch in the OFF/RESET position.
❑	❑	37.	Open the generator set main line circuit breakers, open the safeguard breaker, and/or remove the fuses connected to the transfer switch.
❑	❑	38.	Reconnect the power switching device and logic controller wire harness at the inline disconnect plug at the transfer switch.
❑	❑	39.	Close the normal source circuit breaker or replace fuses to the transfer switch. Place the generator set master switch to the AUTO position.
❑	❑	40.	Close the generator set main line circuit breakers, close the safeguard breaker, and/or replace the fuses connected to the transfer switch.
❑	❑	41.	Place the transfer switch in the TEST position (load test or open normal source circuit breaker). **NOTE:** Obtain permission from the building authority before proceeding. This procedure tests transfer switch operation and connects building load to generator set power.
❑	❑	42.	Readjust frequency to 50 or 60 Hz with total building loads.*
❑	❑	43.	Verify that the current phase is balanced for three phase systems.
❑	❑	44.	Release the transfer switch test switch or close the normal circuit breaker. The transfer switch should retransfer to the normal source after appropriate time delay(s).
❑	❑	45.	Allow the generator set to run and shut down automatically after the appropriate cool down time delay(s).
❑	❑	46.	Set the plant exerciser to the customer's required exercise period, if equipped.
❑	❑	47.	Verify that all options on the transfer switch are adjusted and functional for the customer's requirements.
❑	❑	48.	If possible, run the building loads on the generator set for several hours or perform the load bank test if required.
❑	❑	49.	Verify that all the wire connections from the generator set to the transfer switch and optional accessories are tight and secure.
❑	❑	50.	Verify that the customer has the appropriate engine/generator set and transfer switch literature. Instruct the customer in the operation and maintenance of the power system.
❑	❑	51.	Fill out the startup notification at this time and send the white copy to the Generator Warranty Dept. Include the warranty form if applicable.

* Some models with an Engine Electronic Control Module (ECM) may limit or prohibit adjusting the engine speed or testing shutdowns. Refer to appropriate documentation available from the manufacturer.