State of Rhode Island and Providence Plantations Contract Offer

RIVIP BIDDER CERTIFICATION COVER FORM

SECTION 1 - VENDOR INFORMATION

Bid/RFPNumber:	7548430A4
Bid/RFP Title:	LINCOLN CAMPUS DOOR REPLACEMENT - CCRI (13 PGS)
Opening Date & Time:	3/14/2014 10:30 AM
RIVIP Vendor ID #:	20476
Vendor Name:	Nadeau Corporation
Address:	727 Washington St
	S. Attleboro , MA 02703
	USA
Telephone:	508-399-6776
Fax:	508-399-7270
E-Mail:	en@nadeaucorp.com
Contact Person:	Ernie Nadeau
Title:	President
R.I. Foreign Corp #:	

NOTICE TO VENDORS

Each bid proposal for a *public works project* must include a "public copy" to be available for public inspection upon the opening of bids. **Bid proposals that do not include a copy for public inspection will be deemed nonresponsive.** For further information on how to comply with this statutory requirement, see R. I. Gen. Laws §§ 37-2-18(b) and (j). Also see Procurement Regulation 5.11, and in addition, for highway and bridge projects, also see Procurement Regulation 5.13, accessible at www.purchasing.ri.gov.

NOTE: AWARD OF CONTRACTS AND PURCHASE ORDERS SHALL BE SUBJECT, AT THE DISCRETION OF THE PURCHASING AGENT, TO THE OFFEROR COMPLETING AN ON-LINE RIVIP REGISTRATION at www.purchasing.ri.gov. It is THE RESPONSIBILITY OF THE VENDOR to make on-line corrections/updates using the Vendor maintenance program on the RI Division of Purchases Web Site.

SECTION 2 – REQUIREMENTS

ALL OFFERS ARE SUBJECT TO THE REQUIREMENTS, PROVISIONS AND PROCEDURES CONTAINED IN THIS CERTIFICATION FORM. Offerors are expected to READ, SIGN and COMPLY WITH all requirements. Failure to do so may be grounds for disqualification of the offer contained herein.

Section 2.1 - RULES FOR SUBMITTING OFFERS

2.1A. This CERTIFICATION FORM MUST BE ATTACHED IN ITS ENTIRETY TO THE FRONT OF THE OFFER and shall be considered an integral part of each offer made by a vendor to enter into a contract with the State of Rhode Island, Division of Purchases. As such, submittal of the entire Bidder Certification Cover Form, signed by a duly authorized representative of the offeror attesting that he/she (1) has read and agrees to comply with the requirements set forth herein and (2) to the accuracy of the information provided and the offer extended, is a mandatory part of any contract award.

To assure that offers are considered on time, each offer must be submitted with the specific Bid/RFP/LOI number (provided above) and the date and time of opening marked in the upper left hand corner of envelope. Each bid/offer must be submitted in separate sealed envelopes.

A complete, signed (in ink) offer package must be delivered to the Division of Purchases (via any mail or messenger service) by the time and date specified for the opening of responses in a sealed envelope.

Bids must be submitted on the RI bid solicitation forms provided, indicating brand and part numbers of items offered, as appropriate. Bidders must submit detailed cuts and specs on items offered as equivalent to brands requested WITH THE OFFER. Bidders must be able to submit samples if requested.
Mail To: Division of Purchases, One Capitol Hill, Second Floor, Providence, RI 02908-5855.

Documents misdirected to other State locations or which are not present in the Division of Purchases at the time of opening for whatever cause will be deemed to be late and will not be considered. For the purposes of this requirement, the official time and date shall be that of the time clock in the Division of Purchases. Postmarks shall not be considered proof of timely submission.

2.1B. RIVIP SOLICITATIONS. To assure maximum access opportunities for users, public bid/RFP solicitations shall be posted on the RIVIP for a minimum of seven days and no amendments shall be made within the last five days before the date an offer is due. Except when access to the Web Site has been severely curtailed and it is determined by the State Purchasing Agent that special circumstances preclude extending a solicitation due date, requests to mail or fax hard copies of solicitations will not be honored. When the result of an Internet solicitation is unsuccessful, the State of Rhode Island will cancel the original solicitation and resolicit the original offer directly from vendors.

2.2. PRICING. Offers are irrevocable for sixty (60) days from the opening date (or such other extended period set forth in the solicitation) and may not be withdrawn, except with the express permission of the State Purchasing Agent. All pricing will be considered to be firm and fixed unless otherwise indicated. The State of Rhode Island is exempt from Federal excise taxes and State Sales and Use Taxes. Such taxes shall not be included in the bid price. PRICES QUOTED ARE FOB DESTINATION.

2.3. DELIVERY and PRODUCT QUALITY. All offers must define delivery dates for all items; if no delivery date is specified, it is assumed that immediate delivery from stock will be made. The contractor will be responsible for delivery of materials in first class condition. Rejected materials will be at vendor's expense.

2.4. PREVAILING WAGE, OSHA SAFETY TRAINING, and APPRENTICESHIP REQUIREMENTS.

Bidders must comply with the provisions of the Rhode Island labor laws, including R. I. Gen. Laws §§ 37-13-1 *et seq.* and occupational safety laws, including R. I. Gen. Laws §§ 28-20-1 *et seq.* These laws mandate for public works construction projects the payment of prevailing wage rates, the implementation and maintenance of occupational safety standards, and for projects with a minimum value of $1 Million, the employment of apprentices. The successful Bidder must submit certifications of compliance with these laws from each of its subcontractors prior to their commencement of any work. Prevailing wage rates, apprenticeship requirements, and other workforce and safety regulations are accessible at www.dlt.ri.gov.

2.5. PUBLIC RECORDS. Offerors are advised that all materials submitted to the State for consideration in response to this solicitation will be considered without exception to be Public Records pursuant to Title 38 Chapter 2 of the Rhode Island General Laws, and will be released for inspection immediately upon request once an award has been made. Offerors are encouraged to attend public bid/RFP openings to obtain information; however, bid/RFP response summaries may be reviewed after award(s) have been made by using the RIVIP at any time or appearing in person at the Division of Purchases Mondays through Fridays between 8:30 a.m. and 3:30 p.m. Telephone requests for results will not be honored. Written requests for results will only be honored if the information is not available on the RIVIP.

SECTION 3 - AWARD DETERMINATION

Award will be made to the responsive and responsible offeror quoting the lowest net price in accordance with specifications, for any individual item(s), for major groupings of items, or for all items listed, at the State's sole option.
3.1. BID SURETY. Where bid surety is required, bidder must furnish a bid bond or certified check for 5% of the bid total with the bid, or for such other amount as may be specified. Bids submitted without a required bid surety will not be considered.

3.2. SPECIFICATIONS. Unless specified "no substitute," product offerings equivalent in quality and performance will be considered (at the sole option of the State) on the condition that the offer is accompanied by detailed product specifications. Offers which fail to include alternate specifications may be deemed nonresponsive.

SECTION 4 – CONTRACT PROVISIONS

4.1. VENDOR AUTHORIZATION TO PROCEED.

4.1A. When a purchase order, change order, contract/agreement or contract/agreement amendment is issued by the RI Division of Purchases, no claim for payment for services rendered or goods delivered contrary to or in excess of the contract terms and scope shall be considered valid unless the vendor has obtained a written change order or contract amendment issued by the Division of Purchases PRIOR TO delivery.

4.1B. Any offer, whether in response to a solicitation for proposals or bids, or made without a solicitation, which is accepted in the form of an order OR Pricing Agreement made in writing by the Purchasing Agent, or a state official with purchasing authority delegated by the Purchasing Agent, shall be considered a binding contract.

4.2. REGULATIONS, GENERAL TERMS AND CONDITIONS GOVERNING STATE CONTRACTS. This solicitation and any contract or purchase order arising from it are issued in accordance with the specific requirements described herein, and the State's Purchasing Laws and Regulations and other applicable State Laws. The Regulations, General Terms and Conditions are incorporated into all state contracts. These regulations and basic information on How To Do Business with the State of Rhode Island are posted on the Rhode Island Vendor Information Program Website (www.purchasing.ri.gov).

4.2A. ARRA SUPPLEMENTAL TERMS AND CONDITIONS. Contracts and sub-awards funded in whole or in part by the American Recovery and Reinvestment Act of 2009. Pub.L.No. 111-5 and any amendments thereto, such contracts and sub-awards, shall be subject to the Supplemental Terms and Conditions For Contracts and Sub-awards Funded in Whole or in Part by the American Recovery and Reinvestment Act of 2009. Pub.L.No. 111-5 and any amendments thereto located on the Division of Purchases website at www.purchasing.ri.gov.

4.3. EQUAL EMPLOYMENT OPPORTUNITY. Compliance certificate and agreement procedures will apply to all awards for supplies or services valued at $10,000 and more. Minority Business Enterprise policies and procedures, including subcontracting opportunities as described in Title 37 Chapter 14.1, of the Rhode Island General Laws, also apply.

4.4. PERFORMANCE BONDS. Where indicated, successful bidder must furnish a 100% performance bond and labor and payment bond for contracts subject to Title 37 Chapters 12 and 13 of the Rhode Island General Laws. All bonds must be furnished by a surety company authorized to conduct business in the State of Rhode Island. Performance bonds must be submitted within 21 calendar days of the issuance of a tentative notice of award.

4.5. DEFAULT and NON-COMPLIANCE. Default and/or non-compliance with the RIVIP requirements and any other aspects of the award may result in withholding of payment(s), contract termination, debarment, suspension, or any other remedy necessary that is in the best interest of the state.

4.6. COMPLIANCE. Vendor must comply with all applicable federal, state and local laws, regulations and ordinances.

4.7. SPRINKLER IMPAIRMENT AND HOT WORK. The Contractor agrees to comply with the practices of the State's insurance carrier for sprinkler impairment and hot work. Prior to performing any work, the Contractor shall obtain the necessary information for compliance from the Risk Management Office at the Department of Administration or the agency for which work will be performed.

SECTION 5 – CERTIFICATIONS AND DISCLOSURES
ALL CONTRACT AWARDS ARE SUBJECT TO THE FOLLOWING DISCLOSURES & CERTIFICATIONS

Offerors must respond to every disclosure statement.
A person authorized to enter into contracts must sign the offer and attest to the accuracy of all statements.

Indicate Yes (Y) or No (N):

N 1. State whether your company, or any owner, stockholder, officer, director, member, partner, or principal thereof, or any subsidiary or affiliated company, has been subject to suspension or debarment by any federal, state, or municipal government agency, or the subject of criminal prosecution, or convicted of a criminal offense within the previous five (5) years. If so, then provide details below.

N 2. State whether your company, or any owner, stockholder, officer, director, member, partner, or principal thereof, or any subsidiary or affiliated company, has had any contracts with a federal, state or municipal government agency terminated for any reason within the previous five (5) years. If so, then provide details below.

N 3. State whether your company or any owner, stockholder, officer, director, member, partner, or principal thereof, or any subsidiary or affiliated company, has been fined more than $5000 for violation(s) of Rhode Island environmental laws by the Rhode Island Department of Environmental Management within the previous five (5) years. If so, then provide details below.

Y 4. I/we certify that I/we will immediately disclose, in writing, to the Chief Purchasing Officer any potential conflict of interest, which may occur during the course of the engagement authorized pursuant to this contract.

Y 5. I/we acknowledge that, in accordance with Chapter 37-2-54(c) of the Rhode Island General Laws "no purchase or contract shall be binding on the state or any agency thereof unless approved by the Department [of Administration] or made under general regulations which the Chief Purchasing Officer may prescribe", including change orders and other types of contracts and under State Purchasing Regulation 8.2.1.1.2, "any alleged oral agreement or arrangements made by a bidder or contractor with any agency or an employee of the Office of Purchases may be disregarded and shall not be binding on the state".

Y 6. I/we certify that I/we or my/our firm possesses all licenses required by Federal and State laws and regulations as they pertain to the requirements of the solicitation and offer made herein and shall maintain such required license(s) during the entire course of the contract resulting from the offer contained herein and should my/our license lapse or be suspended, I/we shall immediately inform the Rhode Island State Purchasing Agent in writing of such circumstance.

Y 7. I/we certify that I/we will maintain required insurance during the entire course of the contract resulting from the offer contained herein and should my/our insurance lapse or be suspended, I/we shall immediately inform the Rhode Island State Purchasing Agent in writing of such circumstance.

Y 8. I/we certify that I/we understand that falsification of any information herein or failure to notify the Rhode Island State Purchasing Agent as certified herein may be grounds for suspension, debarment and/or prosecution for fraud.

Y 9. I/we acknowledge that the provisions and procedures set forth in this form apply to any contract arising from this offer.

Y 10. I/we acknowledge that I/we understand the State's Purchasing Laws (37-2 of the General Laws of Rhode Island) and Purchasing Regulations and General Terms and Conditions available at the Rhode Island Division of Purchases Website (www.purchasing.ri.gov) apply as the governing conditions for any contract or purchase order I/we may receive from the State of Rhode Island, including the offer contained herein.

Y 11. I/We certify that the bidder: (i) is not identified on the General Treasurer's list, created pursuant to R.I. Gen. Laws § 37-2.5-3, as a person or entity engaging in investment activities in Iran described in § 37-2.5-2(b); and (ii) is not engaging in any such investment activities in Iran.

Y 12. I/we certify that the above vendor information is correct and complete.

IF YOU HAVE ANSWERED "YES" TO QUESTIONS #1–3 OR IF YOU ARE UNABLE TO CERTIFY YES TO ITEMS #4–12 OF THE FOREGOING, PROVIDE DETAILS/EXPLANATION BELOW AND/OR IN AN ATTACHED STATEMENT. INCOMPLETE CERTIFICATION FORMS SHALL BE GROUNDS FOR DISQUALIFICATION OF OFFER.

Signature below commits vendor to the attached offer and certifies (1) that the offer has taken into account all solicitation amendments, (2) that the above statements and information are accurate and that vendor understands and has complied with the requirements set forth herein. When delivering offers in person to One Capitol Hill, vendors are advised to allow at least one hour additional time for clearance through security checkpoints.

Date March 14, 2014

Vendor's Signature (Person authorized to enter into contracts; signature must be in ink.)

Ernest J. Nadeau, President

Print Name and Title of company official signing offer

BID FORM

DATE: March 14, 2014

BID TO:
STATE OF RHODE ISLAND
DEPARTMENT OF ADMINISTRATION
OFFICE OF PURCHASES
ONE CAPITAL HILL
PROVIDENCE, RHODE ISLAND 02908
401-277-2317

PROJECT:
COMMUNITY COLLEGE OF RHODE ISLAND
FLANAGAN CAMPUS
1762 LOUISQUISSET PIKE
LINCOLN, RHODE ISLAND 02865
NEW DOORS

SUBMITTED BY:

Firm Name: Nadeau Corporation

Street Address: 727 Washington Street

Mailing Address (if different from above):

City/State/Zip: South Attleboro, MA 02703

TELEPHONE: (508) 399-6776

FAX: (508) 399-7270

CONTACT: Ernest J Nadeau, President
Name/Title

FEDERAL TAX I.D. NUMBER: 04-2827918

LICENSE NO.: 10266
(If Applicable)

CONTRACTOR'S PROPOSAL The undersigned Bidder agrees that he will contract with the Community College of Rhode Island to provide all necessary labor, supervision, tools, equipment and other means to do all the work and furnish all the materials specified in the contract in the manner and time therein prescribed, and that he will take in full payment the amount set forth hereon.

Bid for New Door Project, (Flanagan Campus), in its entirety, all Addenda, and the following

BID FORM AMENDMENT

ATTACH TO FULL BID FORM AS REPLACEMENT TO UNIT PRICES and QUANTITY BREAKDOWN

UNIT PRICES:

1. Foreman Hourly Rate $ 125.00
2. Carpenter Hourly Rate $ 100.00
3. Laborer Hourly Rate $ 80.00
4. *Installation – Single door and Hardware* $ 250.00
5. *Installation – Double door and Hardware* $ 500.00

NOTE: Items 4 and 5 above shall be used to calculate charges against the Installation Allowance for additional doors per Section 01 21 00.

QUANTITY BREAKDOWN (Inclusive of all hardware, doors, frames etc. as applicable, complete install); SEE SPECIFICATIONS FOR ALL REQUIRED ITEMS IN EACH SET:

(NOTE: SEE SECTION 00 20 00-INSTRUCTIONS TO BIDDERS IN THE EVENT DISCREPANCIES EXIST BETWEEN THE QUANTITIES INDICATED BELOW AND INDICATED ON THE PLANS AND SCHEDULE.)

1 **D4 Single Doors**

QUANTITY: 290

Unit price in writing: 638 ea

Total price in writing: 185,020 ea

2 **D5 Handicap Operator Entrances**

QUANTITY: 2

Unit price in writing: $6,125.00 Six Thousand One Hundred Twenty Five Dollars.

Total price in writing: 12,250 ea

3 **D6 Stairwell Doors**

QUANTITY: 27

Unit price in writing: $1,725.00 One Thousand Seven Hundred Twenty Five Dollars.

Total price in writing: 46,575.00

4 **D7 Large Corridor Doors**

QUANTITY: 9

Unit price in writing: $4,425.00 Four Thousand Four Hundred Twenty Five Dollars

Total price in writing: 39,825.00

5 **D8 Small Corridor Doors**

QUANTITY: 20

Unit price in writing: $4,200.00 Four Thousand Two Hundred Dollars.

Total price in writing: 84,000.00

6 **D9 Main Entrance Doors**

QUANTITY: 8

Unit price in writing: $30,000 Thirty Thousand Dollars

Total price in writing: 240,000.00

7 **D10 Field House Exterior Doors**

QUANTITY: 6 FULL SETS OF (4) DOORS WITH FRAME, 3 HALF SETS OF (2) DOORS

FULL SETS

Unit price in writing: $6,900.00 Six Thousand Nine Hundred Dollars.

Total price in writing: 41,400 ~~00~~

HALF SETS

Unit price in writing: $4,000.00 Four Thousand Dollars

Total price in writing: 12,000 ~~00~~

8 **D11 Lecture Hall Doors**

QUANTITY: 10

Unit price in writing: 1840 ~~00~~

Total price in writing: 18,400 ~~00~~

9 **D12 Library Main Entry Door Lobby "A"**

QUANTITY: 1

Unit price in writing: 6,550 ~~00~~

Total price in writing: 6,550 ~~00~~

10 **D13 Electrical Closet Doors**

QUANTITY: 13

Unit price in writing: 1,500 ~~00~~

Total price in writing: 19,500.00

11 **D14 Janitor Closet Doors**

QUANTITY: 17

Unit price in writing: 1,000.00

Total price in writing: 17,000.00

12 **D15 Handicap Operators - Interior**

QUANTITY: 6

Unit price in writing: 3,650.00

Total price in writing: 21,900.00

13 **D16 Music Practice Room Door**

QUANTITY: 7

Unit price in writing: 920.00

Total price in writing: 6,440.00

14 **D17 Classroom Entry Double Doors**

QUANTITY: 11

Unit price in writing: 2,600.00

Total price in writing: 28,600.00

15 **D18 Dutch Door**

QUANTITY: 3

Unit price in writing: 1,052 ~~00~~

Total price in writing: 3,156 ~~00~~

16 **D19 Environmental Office Door**

QUANTITY: 1

Unit price in writing: 1,675 ~~00~~

Total price in writing: 1,675 ~~00~~

17 **D20 Bookstore Threshold**

QUANTITY: 2

Unit price in writing: 230 ~~00~~

Total price in writing: 460 ~~00~~

18 **D21 Double Door with Inactive Leaf**

QUANTITY: 8

Unit price in writing: 1,400 ~~00~~

Total price in writing: 11,200 ~~00~~

19 **D22 Double Door – Non-rated**

QUANTITY: 3

Unit price in writing: 1,860 ~~00~~

Total price in writing: 5,580 ~~00~~

20 **D23 Single-occupant Toilet Room**

QUANTITY: 6

Unit price in writing: 940 ^no

Total price in writing: 5,640 ^no

21 **D24 Interconnecting Door**

QUANTITY: 1

Unit price in writing: 920 ^no

Total price in writing: 920 ^no

22 **D25 Bookstore Double Door**

QUANTITY: 1

Unit price in writing: 2,850 ^no

Total price in writing: 2,850 ^no

23 **Daily Cleanup**

1 Lump Sum

Unit price in writing: 6,720 ^no

Total price in writing: 6,720 ^no

25 **Removal and Disposal of Asbestos Containing Wood Doors**

1 Lump Sum

Unit price in writing: 46,100.00

Total price in writing: 46,100.00

26 ***ATTIC STOCK – MATERIALS ONLY***

(See Unit Price/Allowances for Installation)

QUANTITIES:

SET D4:	**10**	Unit price in writing 2,875.00
SET D6:	**1**	Unit price in writing 1,150.00
SET D7:	**1**	Unit price in writing 2,875.00
SET D8:	**1**	Unit price in writing 2,645.00
SET D9:	**1 LEAF**	Unit price in writing 2,300.00
SET D17:	**1**	Unit price in writing 1,955.00

Total price in writing: $ 877,505.00

* EIGHT HUNDRED SEVENTY SEVEN THOUSAND FIVE HUNDRED & FIVE DOLLARS *

documents by this reference are hereby made a part of this proposal:

a. Invitation for Bids Specifications 00 10 00
b. Instructions to Bidder Specifications 00 20 00
c. Special Instructions to Bidder Specifications 00 21 00
d. Bid Form 00 41 00
e. Bidders Qualifications AIA A305
f. Accord Certificate of Insurance Form AIA G715

Bidder acknowledges receipt (if applicable) of Addenda Number(s) 1, 2, and 3, 4.

The cost of all labor, material, and equipment necessary for the completion of the work itemized, even though not shown or specified, shall be included in the unit price for the various items shown herein. The Community College of Rhode Island reserves the right to increase or decrease the quantity of any item or omit items as may be deemed necessary and the same shall in no way affect or make void the contract. When increases or decreases are made, appropriate additions or deductions from the contract total price will be made at the stipulated unit price.

Please check your calculations before submitting your Bid; the Community College of Rhode Island will not be responsible for Bidder's miscalculations.

All items shall be completely filled out in writing

UNIT PRICES:

1. Foreman Hourly Rate $_____
2. Carpenter Hourly Rate $_____
3. Laborer Hourly Rate $_____

QUANTITY BREAKDOWN (Inclusive of all hardware, doors, frames etc. as applicable, complete install); SEE SPECIFICATIONS FOR ALL REQUIRED ITEMS IN EACH SET:

(NOTE: SEE SECTION 00 20 00-INSTRUCTIONS TO BIDDERS IN THE EVENT DISCREPANCIES EXIST BETWEEN THE QUANTITIES INDICATED BELOW AND INDICATED ON THE PLANS AND SCHEDULE.)

1 **D4 Single Doors**

QUANTITY: 286

Unit price in writing: _____

Total price in writing: _____

2 **D5 Handicap Operator Entrances**

QUANTITY: 2

Unit price in writing: _____

Total price in writing: _____

3 **D6 Stairwell Doors**

QUANTITY: 15

Unit price in writing: _____

Total price in writing: _____

4 **D7 Large Corridor Doors**

QUANTITY: 9

Unit price in writing: _____

Total price in writing: _____

5 **D8 Small Corridor Doors**

QUANTITY: 20

Unit price in writing: _____

Total price in writing: _____

6 **D9 Main Entrance Doors**

QUANTITY: 8

Unit price in writing: _____

Total price in writing: _____

7 **D10 Field House Exterior Doors**

QUANTITY: 6 FULL SETS OF (4) DOORS WITH FRAME, 3 HALF SETS OF (2) DOORS

FULL SETS

Unit price in writing: _____

Total price in writing: _____

HALF SETS

Unit price in writing: _____

Total price in writing: _____

8 **D11 Lecture Hall Doors**

QUANTITY: 10

Unit price in writing: _____

Total price in writing: _____

9 **D12 Library Main Entry Door Lobby "A"**

QUANTITY: 1

Unit price in writing: _____

Total price in writing: _____

10 **D13 Electrical Closet Doors**

QUANTITY: 13

Unit price in writing: _____

Total price in writing: _____

11 **D14 Janitor Closet Doors**

QUANTITY: 15

Unit price in writing: _____

Total price in writing: _____

12 **D15 Handicap Operators - Interior**

QUANTITY: 8

Unit price in writing: _____

Total price in writing: _____

13 **D16 Music Practice Room Door**

QUANTITY: 7

Unit price in writing: _____

Total price in writing: _____

14 **D17 Classroom Entry Double Doors**

QUANTITY: 9

Unit price in writing: _____

Total price in writing: _____

15 **D18 Dutch Door**

QUANTITY: 3

Unit price in writing: _____

Total price in writing: _____

16 **D19 Environmental Office Door**

QUANTITY: 2

Unit price in writing: _____

Total price in writing: _____

17 **D20 Bookstore Threshold**

QUANTITY: 2

Unit price in writing: _____

Total price in writing: _____

18 **D21 Double Door with Inactive Leaf**

QUANTITY: 8

Unit price in writing: _____

Total price in writing: _____

19 **D22 Double Door – Non-rated**

QUANTITY: 3

Unit price in writing: _____

Total price in writing: _____

20 **D23 Single-occupant Toilet Room**

QUANTITY: 4

Unit price in writing: _____

Total price in writing: _____

21 **D24 Interconnecting Door**

QUANTITY: 1

Unit price in writing: _____

Total price in writing: _____

22 **D25 Bookstore Double Door**

QUANTITY: 1

Unit price in writing: _____

Total price in writing: _____

23 **Daily Cleanup**

1 Lump Sum

Unit price in writing: _____

Total price in writing: _____

25 **Removal and Disposal of Asbestos Containing Wood Doors**

1 Lump Sum

Unit price in writing: _____

Total price in writing: _____

****

Project Total Cost in writing: _____

****

Nadeau Corporation
Company Name of Bidder

727 Washington Street, So. Attleboro, MA 02703
Mailing Address (PO Box or street) Town, State, and Zip Code

Ernest J. Nadeau
Name of Authorized Representative

Signature

President
Title

Corporation
Type of Business (Corp, Partnership, Sole Proprietorship)

508-399-6776
Telephone Number

508-399-7270
Facsimile=

DATES:

Anticipated Award	June 1, 2014
Submit one complete (all inclusive) submittal package	within 10 days of issuance of CCRI PO
Field verify (survey) the sizes of all doors and frames and release order	within 30 days of issuance of CCRI PO
Mobilize on site	within 60 days of issuance of CCRI PO
Substantial Completion	210 days of issuance of CCRI PO
Final Completion	240 days of issuance of CCRI PO

SCOPE OF WORK:

1. Vendor to supply all labor, materials and equipment needed to furnish and install new doors, frames, hardware, etc. at the Flanagan Campus – CCRI per attached Specifications (including Exhibit I following this Section), and Exhibit II Drawings: Door Schedule, First, Second Floor and Field House Drawings, in accordance with this scope of work.

2. Vender is responsible for preparing all openings to receive new doors, hardware, frames, etc. as required in accordance with this scope.

3. Vendor is responsible for field verifying (survey) the sizes of all doors and frames as required by this scope of this work within 30 days of issuance of CCRI PO, refer to Exhibit II Drawings. Sizes indicated on schedule are nominal only; vendor shall verify actual door dimensions required for fit in existing frames. Vendor is to provide proof that the doors and frames have been released for fabrication within 30 days of issuance of CCRI PO or pay **liquidated damages of $500** per calendar day for each day late.

4. Vendor is responsible for in-filling unused holes from old hardware remaining in the door frames. This includes filler plates left by hinges. Plates and /or filling material are to be primed only.

5. Vendor is responsible for replacing and/or installing new silencers on all doorways.

6. Doors installed as part of this Project shall carry a Lifetime Warrantee. The Basis of Design for the wood doors is based on Lambton Doors. Alternate/or equals are to be submitted 5 days before the closing of the Bid for approval by the State.

7. All hardware installed as part of this Project shall be covered under manufacturers documented warrantee unless otherwise specified. The hardware manufacturers identified in the Specifications (Exhibit I) cannot be substituted with and/or equal manufacturer.

8. The materials, products and equipment described in the Bidding Documents establish a standard of required function, dimension, appearance and quality to be met by any proposed substitution. No substitution will be considered prior to receipt of bid unless written request for approval has been received by the Division of Purchases no later than 5 days before the closing of the Bid. Such requests shall include the name of the material or equipment for which it is to be substituted and a complete description of the proposed substitution including drawings, performance and test data and other information necessary for any evaluation. A statement setting forth changes in other materials, equipment, or other portions of the work, including changes in work of other contracts that that incorporation of the proposed substitution would require, shall be included. The burden of proof of the merit of the proposed substitution in upon the proposer. The State of Rhode Island's decision of approval or disapproval of the proposed substitution shall be final. If the State approves a proposed substitution prior to receipt of bids, such approval will be set forth in an Addendum. Bidders shall not rely upon approvals made in any other manner. No substitutions will be considered after the Contract Award.

9. All existing wood core doors and door slabs are to be considered as containing asbestos materials. This vendor is responsible for submitting an asbestos abatement plan in accordance with Local, State and Federal Government requirements for approval by the Architect. Include all removal, containment, disposal costs, etc. in the Bid. Written proof of disposal by the accepting facility is to be submitted with the closeout documents. An approved storage container can be placed onsite for temporary storage of old doors. See specification section for additional information.

10. The Project Final Completion is 240 calendar days from issuance of CCRI Purchase Order. Vendor must designate a Project Manager to conduct weekly Project meetings and issue minutes of meetings by the next business day. Meetings will be held on site at the Flanagan Campus. The location and schedule will be arranged with the Physical Plant.

11. **Liquidated damages in the amount of $10,000** per day will start 210 calendar days after issuance of the CCRI PO if substantial completion has not been met.

12. Work hours are to be arranged with the CCRI Supervisor on site, normal working hours are Monday thru Friday 7:00AM to 3:30PM. The CCRI Flanagan Campus has access 24/7. Work can be done off hours 3:30PM to 7AM Monday through Sunday. This off hour work must be scheduled in advance with the Physical Plant. At no time can CCRI business operations including classes be interrupted. Any installation process that is deemed as disruptive including but not limited to drilling, blocking egress to and from a room, coring, hammering of any kind must be done off hours.

13. Vendor is responsible for all labor, including but not limited to Electrical, Plumbing and General as required by the scope of this work.

14. Vendor is not required to certify the existing frames that do not have labels on them or the label is painted over. The existing frames are not to be replaced unless specifically identified in this scope of work.

15. Where indicated in this scope, replace the existing doors with 90 minute doors even though existing frame labels indicate 60 min rating.

16. Vendor is responsible for obtaining and paying for any required Local and State licenses and Permits.

17. The existing Library frames are to remain; the mullions are to be replaced as indicated in this scope of work.

18. The Library main entry doors are located in Lobby 'A'. Per Specification D12, all four existing doors are to be replaced. Including the center mullion.

19. The approximate quantities of D4 doors with vision panels is 80. Vendor is responsible for verifying during survey.

20. The location of the nearest electric rooms to doors D15 are as follows: Main Entrance 'D' restrooms two units – closet 2462 Main Entrance 'A' lobby second floor restrooms two units – closet 1428, Main Entrance 'A' one unit leading into advising and counseling – closet – 1215, Field House Main Lobby restrooms two units – closet FH017 and Field House Main Lobby, entrance door into gymnasium far right door one unit – closet FH017.

21. See Schedule for locations of janitor and electrical closets. The following is a list of room numbers for electrical and janitorial closets. Electrical Closets: **SPEC D13**: 1215, 1244, 1252, 1428, 1436, 1454, 2243, 2263, 2424, 2438, 2462 . **SPEC D22:** 1340 are double doors Janitorial: **SPEC D14:** 1217, 1245, 1427, 1437, 1565, 2217, 2244, 2264, 2426, 2440, 1109 and 1151.

22. This vendor is responsible to prep the doors only for AD-400 latches which are supplied and installed by Schneider Electric. All electrical work associated with the AD-400 system is the responsibility of Schneider Electric. This vendor will be required to coordinate with Schneider all procedures and schedules for installations.

23. Specification D8 calls for electronic trim only. For emergency egress issues, no corridor doors will be equipped with AD-400 electronic latches unless specified.

24. All outer Main Entrance Doors are to be supplied with specified exit device including one equipped for keyed Schlage cylinder electronic dual credential AD-400 latch. The keyed latch and exit device is to be installed on the East side outer door which is the door to the most right as you enter the Building. All inner vestibule doors are to be supplied with push pull hardware only. No exit devices. See Specification D9.

25. The handicap operators per Specification D5 will be installed on the outer and inner West doors which are to the most left as you enter the Building.

26. This vendor is responsible for all electrical associated removal and/or reinstallation of existing electrical components attached to the existing doors. This includes but is not limited to handicap operators and intrusion alarm wiring and components. Vendor is responsible for all electrical associated with the installation of the new handicap operators.

27. At the small corridor doors the Specifications call for rim devices; unless otherwise specified replace in kind. If a mullion exists it must be replaced in kind. Where no mullion is specified provide vertical rod exit devices.

28. Schneider Electrical was awarded the AD Lock portion which this vendor shall with work with. Schneider Electric will be prepared for installing all AD lock/lockset hardware. If there is a delay due to Schneider's supply chain, the schedule will be adjusted accordingly. Schneider Contact Information: Daniel Quiroz, 978-269-1000, ext. 133. John Sojka, Ingersoll Rand Security Technologies, 860-844-8781.

29. Schneider Electric is to provide all cylinders and keyways as well as AD-400 dual credential electronic latch.

30. At all times and at the completion of the Project, construction areas are to be kept in a clean, safe and acceptable condition.

31. Vendor is responsible for removing all project debris off site daily including all costs associated with waste containers and proper disposal of waste. The College will provide an exterior location for the temporary placement of a waste container.

32. All completed work must be inspected and approved by the College and the Architect.

33. Existing doors that are currently installed with continuous hinges are not included in this Project for replacement unless otherwise specified.

34. Vendor is responsible for the proper undercut of all doors including but not limited to non-standard heights and widths.

35. Vendor to furnish and install factory finished steel doors and frames at the Field House Emergency Exits (D10) including a two part epoxy finish system. See Door specifications. Color to be selected by CCRI from premium color charts. Work includes paintable sealant at perimeter of new frames interior and exterior, along with any field painting of existing walls.

36. Vendor is responsible for removal and disposal of existing doors and frames at the Field House. Work includes any shoring of existing walls, removal and reinstallation of electrical devices, etc. as required.

37. Vendor to match existing bronze aluminum frame color at the main entrances of Flanagan and the Field House. Note heights differ; see schedule.

38. Vendor to furnish and install all glass lites in replacement doors. Fire protection rated glazing consistent with the State of Rhode Island Building Code is to be provided by this vendor. Product data to be provided in submittal package.

39. Within 15 days of award, submit physical color samples of Field House exterior doors and frames.

40. Submit product data and Material Safety Data Sheets (MSDS) for all products used.

41. There will be mandatory weekly progress meetings onsite with four week look a-head schedules to be furnished to the College.

42. Furnish Manufacturer Warrantees against defects in materials with a start date from date of acceptance from the College. Vendor to furnish a one year warranty to start when building is signed off by Owner.

43. Any lift and or staging locations are to be approved by the College and comply with OSHA requirements.

44. Protect all existing finishes, including but not limited to landscaping, paving, sidewalks, aluminum frames, glass, hardware, etc.

45. CCRI will be responsible for maintaining a secured storage area (including climate control) for new doors and materials being staged at the Flanagan Campus. Note that storage onsite at the Flanagan Campus is limited to no more than twenty five (25) doors and two pallets of hardware materials.

46. Vendors assume all responsibility for all material not stored onsite at the Flanagan Campus.

47. Vendor is responsible for ensuring that all employees and subs sign-in every day that they report to the Flanagan Campus and that they are displaying a vendor supplied ID card at all times while working on the Flanagan Campus.

48. Vendor and/or its subcontractors are to be licensed as required by RI Department of Labor. All technicians and/or subcontractors are to be certified in State, Local and current NFPA code procedures for 'fire stop' installations. Proof of such certification must be submitted with the Bid.

49. The vendor awarded this Contract and/or subcontractors and technicians are to be trained and certified by the manufacturer as installers.

50. Vendor is to have 24/7 dedicated service capability with guaranteed (4) hour response and electronic tracking and reporting of all service issues.

51. Vendor is to have all equipment necessary to perform the installation and service including, tools, staging, lift truck, etc. No CCRI equipment or tools will be available.

52. A 10% retainage will be held for this work until completion of this scope is accepted by the College, at which time it will be released.

53. Contractor to include all Bond costs in their Bid.

54. Before starting work, all Contractor workers and Subs are required to obtain and submit a current BCI and State approved picture ID. CCRI reserves the right to deny Campus access to any worker based on information provided on the submitted BCI.

55. All onsite workers are required to be OSHA 10 certified. Copies of this certification along with driver licenses are required on the first day of work.

56. The Contractor is responsible for providing their workers with all personal protection equipment. At minimum hard hats, reflective vests, eye protection, harnesses and ear protection.

EXCLUSIONS:

1. Removal of any signage that is attached to existing doors.

2. The wooden panels located above the majority of the D4 doors are not to be touched. They are not part of this scope of work.

3. Painting of existing frames unless indicated otherwise.

4. Replacement of existing transom panels over doors in offices.

RI Department of Labor and Training
Workforce Regulation and Safety Division
Professional Regulation - Prevailing Wage

General Contractor Apprenticeship Certification Form

This form MUST be completed and submitted at the time of bidding and is available on the Department of Labor and Training's Website at www.dlt.ri.gov, under Workforce Regulation and Safety, Prevailing Wage, Publications and Forms.

Bid/RFP Number: 7548430A4

Bid/RFP Title: Lincoln Campus Door Replacement - CCRI

RIVIP Vendor ID#: 20476

Vendor Name: Nadeau Corporation

Address: 727 Washington Street, So. Attleboro, MA 02703

Telephone: 508-399-6776

Fax: 508-399-7270

E-Mail: en@nadeaucorp.com

Contact Person and Title: Ernest J. Nadeau, President

Nadeau Corporation
727 Washington St., So. Attleboro, MA (Company Name & Address) (hereafter "bidder") hereby certifies that bidder meets the general contractor apprenticeship requirements of R. I. Gen. Laws § 37- 13-3.1 because bidder meets one of the following qualifications (check):

A. X Bidder sponsors a current and duly approved Rhode Island Department of Labor and Training Apprenticeship Program and currently employs at least one apprentice per trade/occupation, who will obtain "on the job training" experience in the apprentice's trade by performing on the contract (attach apprenticeship program standards and apprenticeship agreement);

B. _____ Bidder sponsors a current and duly registered Rhode Island Department of Labor and Training reciprocal apprenticeship program pursuant to R. I. Gen. Laws § 28-45-16 and currently employs at least one apprentice per trade/occupation, who will obtain "on the job training" experience in the apprentice's trade by performing work on the contract (attach apprenticeship program standards, apprenticeship agreement and Rhode Island Department of Labor and Training Reciprocal Apprenticeship Program Approval);

C. _____Bidder has entered into a current collective bargaining agreement with a duly approved Rhode Island Department of Labor and Training Apprenticeship Program sponsor and, pursuant to the terms of the collective bargaining agreement, will employ at least one apprentice per trade/occupation, who will obtain "on the job training" experience in the apprentice's trade by performing work on the contract (attach relevant section of collective bargaining agreement and signature page);

D. _____Bidder has entered into a current labor agreement with a duly approved Rhode Island Department of Labor and Training Apprenticeship Program sponsor and, pursuant to the terms of the labor agreement, will employ at least one apprentice per trade/occupation, who will obtain "on the job training" experience in the apprentice's trade by performing work on the contract (attach relevant section of labor agreement and signature page);

E. _____Bidder will not perform work on the awarded contract except through subcontractors (non performance);

F. _____Bidder has received approval from the Rhode Island Department of Labor and Training that it satisfies the general contractor requirements of R. I. Gen. Laws §37-13-3.1 for purposes of a particular bid (attach Rhode Island Department of Labor and Training correspondence).

Ernest J. Nadeau, President
Printed Name and Title of Authorized Representative

March 14, 2014
Date

Signature of Authorized Representative

STATE OF RHODE ISLAND AND PROVIDENCE PLANTATIONS

Department of Labor and Training
Center General Complex
1511 Pontiac Avenue
Cranston, RI 02920-4407

Telephone: (401) 462-8000
TTY: Via RI Relay 711

Lincoln D. Chafee
Governor
Charles J. Fogarty
Director

13. Comply with all applicable provisions of RIGL §37-13-1, et. seq;

Any questions or concerns regarding this CONTRACT ADDENDUM should be addressed to the contractor or subcontractor's attorney. Additional Prevailing Wage information may be obtained from the Department of Labor and Training at www.dlt.ri.gov/pw.

CERTIFICATION

I hereby certify that I have reviewed this CONTRACT ADDENDUM and understand my obligations as stated above.

By: _____
Ernest J. Nadeau
Title: President

Subscribed and sworn before me this 14 day of March, 20 14.

_____
Notary Public
My commission expires: 2/19/18

An Equal Opportunity Employer/Program, /Auxiliary aids and services are available upon request to individuals with disabilities.
TTY via RI Relay 711

Form W-9 (Rev. 3/7/11)

State of Rhode Island
PAYER'S REQUEST FOR TAXPAYER
IDENTIFICATION NUMBER AND CERTIFICATION

THE IRS REQUIRES THAT YOU FURNISH YOUR TAXPAYER IDENTIFICATION NUMBER TO US. FAILURE TO PROVIDE THIS INFORMATION CAN RESULT IN A $50 PENALTY BY THE IRS. IF YOU ARE AN INDIVIDUAL, PLEASE PROVIDE US WITH YOUR SOCIAL SECURITY NUMBER (SSN) IN THE SPACE INDICATED BELOW. IF YOU ARE A COMPANY OR A CORPORATION, PLEASE PROVIDE US WITH YOUR EMPLOYER IDENTIFICATION NUMBER (EIN) WHERE INDICATED.

Taxpayer Identification Number (T.I.N.)

Enter your taxpayer identification number in the appropriate box. For most individuals, this is your social security number.

Social Security No. (SSN) | | | |

Employer ID No. (EIN) | 04 | 2827918 |

NAME Nadeau Corporation

ADDRESS 727 Washington Street

(REMITTANCE ADDRESS, IF DIFFERENT)

CITY, STATE AND ZIP CODE South Attleboro, MA 02703

CERTIFICATION: Under penalties of perjury, I certify that:

(1) The number shown on this form is my correct Taxpayer Identification Number (or I am waiting for a number to be issued to me), and
(2) I am not subject to backup withholding because either: (A) I have not been notified by the Internal Revenue Service (IRS) that I am subject to backup withholding as a result of a failure to report all interest or dividends, or (B) the IRS has notified me that I am no longer subject to backup withholding.

Certification Instructions -- You must cross out item (2) above if you have been notified by the IRS that you are subject to backup withholding because of under-reporting interest or dividends on your tax return. However, if after being notified by IRS that you were subject to backup withholding you received another notification from IRS that you are no longer subject to backup withholding, do not cross out item (2).

PLEASE SIGN HERE

SIGNATURE Ernest J. Nadeau **TITLE** President **DATE** 3/14/14 **TEL NO.** 508-399-6776

BUSINESS DESIGNATION:

Please Check One: Individual ☐ Medical Services Corporation ☐ Government/Nonprofit Corporation ☐
Partnership ☐ Corporation ☒ Trust/Estate ☐ Legal Services Corporation ☐

NAME: Be sure to enter your full and correct name as listed in the IRS file for you or your business.

ADDRESS, CITY, STATE AND ZIP CODE: Enter your primary business address and remittance address if different from your primary address). If you operate a business at more than one location, adhere to the following:

1) Same T.I.N. with more than one location -- attach a list of location addresses with remittance address for each location and indicate to which location the year-end tax information return should be mailed.
2) Different T.I.N. for each different location -- submit a completed W-9 form for each T.I.N. and location. (One year-end tax information return will be reported for each T.I.N. and remittance address.)

CERTIFICATION -- Sign the certification, enter your title, date, and your telephone number (including area code and extension).

BUSINESS TYPE CHECK-OFF -- Check the appropriate box for the type of business ownership.

Mail to: Supplier Coordinator, One Capitol Hill, Providence, RI 02908

Nadeau Corporation

Construction Development & Engineering

Bid/RFP Number:	7548430A4
Bid/RFP Title:	Lincoln Campus Door Replacement – CCRI
Opening Date & Time:	3/14/2014 10:30 a.m.
RIVIP Vendor ID:	20476
Vendor Name:	Nadeau Corporation
Address:	727 Washington St., S. Attleboro, MA 02703

Possible Substitutions:

Please see attached.

Ernest J. Nadeau, President

March 14, 2014

Date

727 Washington St. South Attleboro, MA 02703 Phone: 508-399-6776 Fax: 508-399-7270

CONCEALED HINGES

CONCEALED EDGE MOUNT, architectural grade aluminum hinges. No mortise required. For new construction or renovation/retrofit.

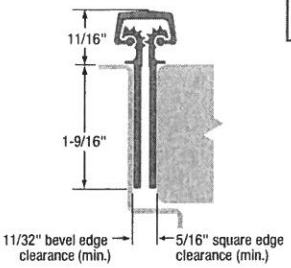

Substitute Ives 112HD

SL11

- Alignment stop on each leaf
- Flush mounted (no door inset)
- For 1-3/4" doors

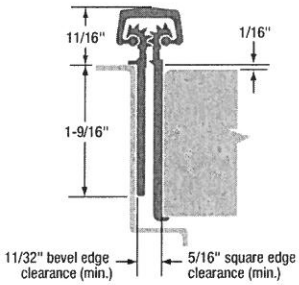

SL14

- Narrow frame leaf allows for weatherstripping or smoke seal
- Door edge protector
- 1/16" door inset

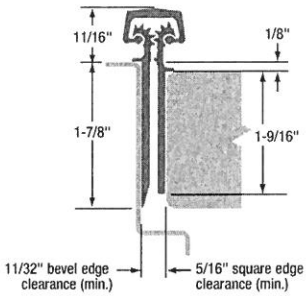

SL18

- Beveled frame leaf allows for weatherstripping or smoke seal
- Ideal for storefront applications
- 1/8" door inset
- For 1-3/4" doors

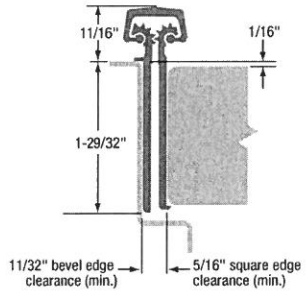

SL24

- Door edge protector
- Frame leaf covers butt hinge preps
- 1/16" door inset
- For 1-3/4" doors

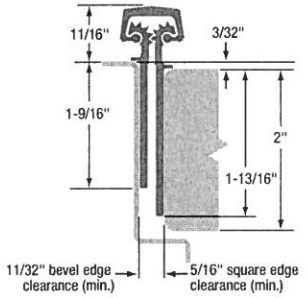

SL26

- For 2" to 2-1/4" doors
- Narrow frame leaf
- Staggered hole pattern
- For doors up to 1,000 lb.
- 3/32" door inset

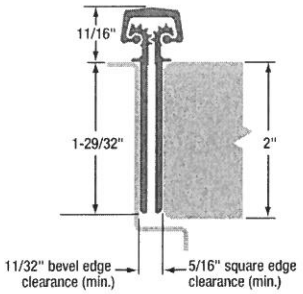

SL27

- For 2" to 2-1/4" doors
- Frame leaf covers butt hinge preps
- Staggered hole pattern
- For doors up to 1,000 lb.
- Flush mounted (no door inset)

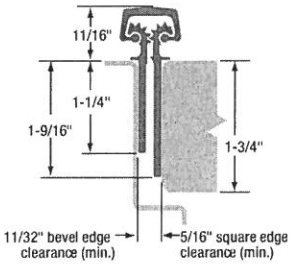

NEW!

SL31

- Flush mounted (no door inset)
- For 1-3/4" doors

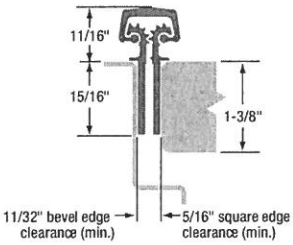

NEW!

SL38

- Flush mounted (no door inset)
- For 1" to 1-3/8" doors

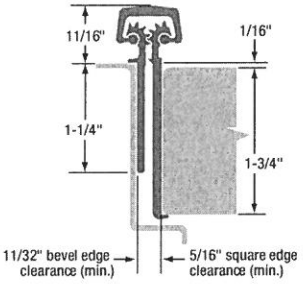

NEW!

SL44

- Door edge protector
- 1/16" door inset
- For 1-3/4" doors

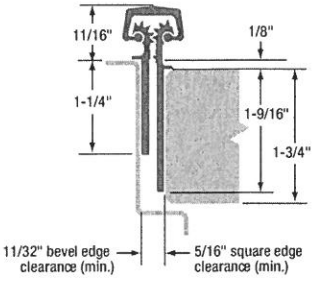

NEW!

SL48

- 1/8" door inset
- For 1-3/4" doors

Specifications: GEARED CONTINUOUS HINGES

FULL SURFACE

SURFACE MOUNT ON FACE OF EXISTING OR NEW DOOR AND FRAME. Ideal for renovation/retrofit or new construction.

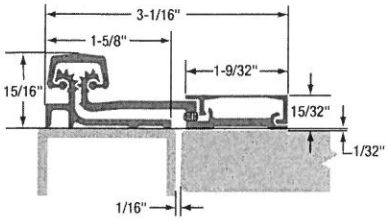

SL21

- Swing-clear action
- Tamper-resistant, removable door leaf cover
- 1/32" door inset
- Standard barrel nuts fit 1-3/8" to 1-3/4" doors
- Long barrel nuts available for 2" to 2-1/4" doors

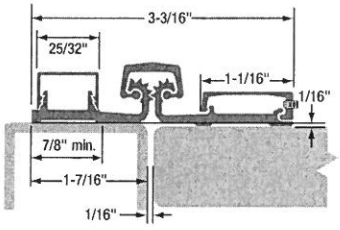

SL57

- Fits narrow (7/8") frame face
- Tamper-resistant, removable door leaf cover
- Center pivot
- 1/16" door inset
- Standard barrel nuts fit 1-3/8" to 1-3/4" doors
- Long barrel nuts available for 2" to 2-1/4" doors

HALF SURFACE

The perfect solution for renovation/retrofit or new construction. **MOUNTS ON DOOR FACE AND FRAME RABBET.**

Sub Ives 53HD

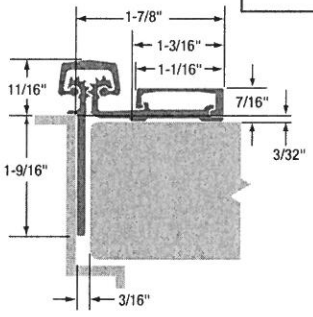

SL53

- Narrow frame leaf
- Tamper-resistant, removable door leaf cover
- 3/32" door inset
- Standard barrel nuts fit 1-3/8" to 1-3/4" doors
- Long barrel nuts available for 2" to 2-1/4" doors

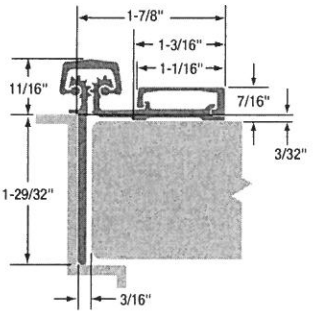

SL54

- Frame leaf covers butt hinge preps
- Tamper-resistant, removable door leaf cover
- 3/32" door inset
- Standard barrel nuts fit 1-3/8" to 1-3/4" doors
- Long barrel nuts available for 2" to 2-1/4" doors

SWING CLEAR

Concealed hinge with **SWING-CLEAR ACTION.** Ideal for hospital applications.

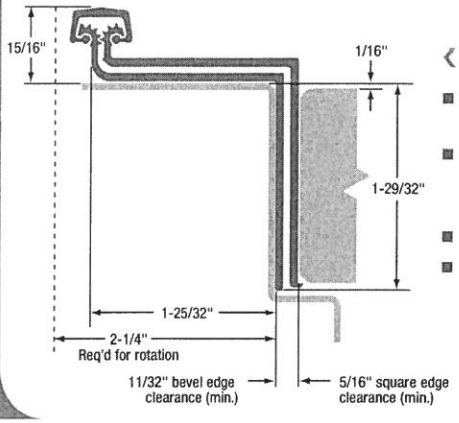

SL41

- Door edge protector
- Requires 2-1/4" frame face for full rotation clearance
- 1/16" door inset
- For 1-3/4" doors

WIDE THROW

Concealed hinge with **WIDE THROW** for clearance of brick moldings or special door/frame designs.

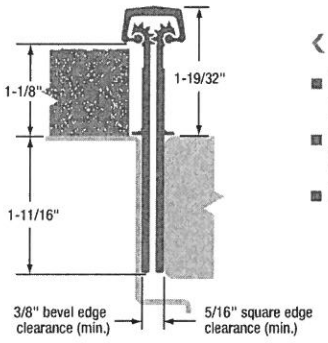

SL40

- Frame leaf covers butt hinge preps
- Flush mounted (no door inset)
- For 1-3/4" doors

SAFETY HINGE

Concealed hinge **SAFETY HINGE** increases safety and help meet legal requirements.

NEW!

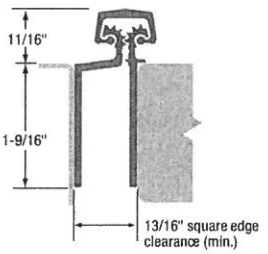

SL71

- Safety hinge (when used without frame stop)
- Provides clearance sufficient to avoid pinching fingers
- Flush mounted (no door inset)
- For 1-3/4" doors

Custom Designed Continuous Hinges

Contact factory for quotations or special-design continuous hinges *(U.S. Navy; U.S. Government; FE-BR; etc.)*

customerservice@select-hinges.com

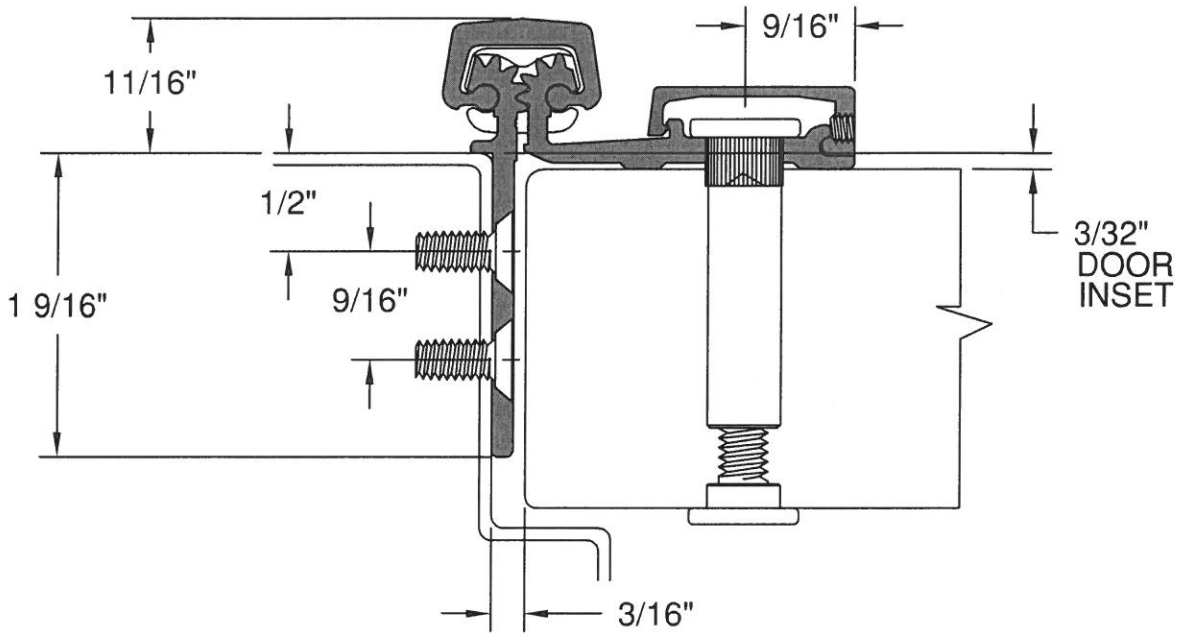

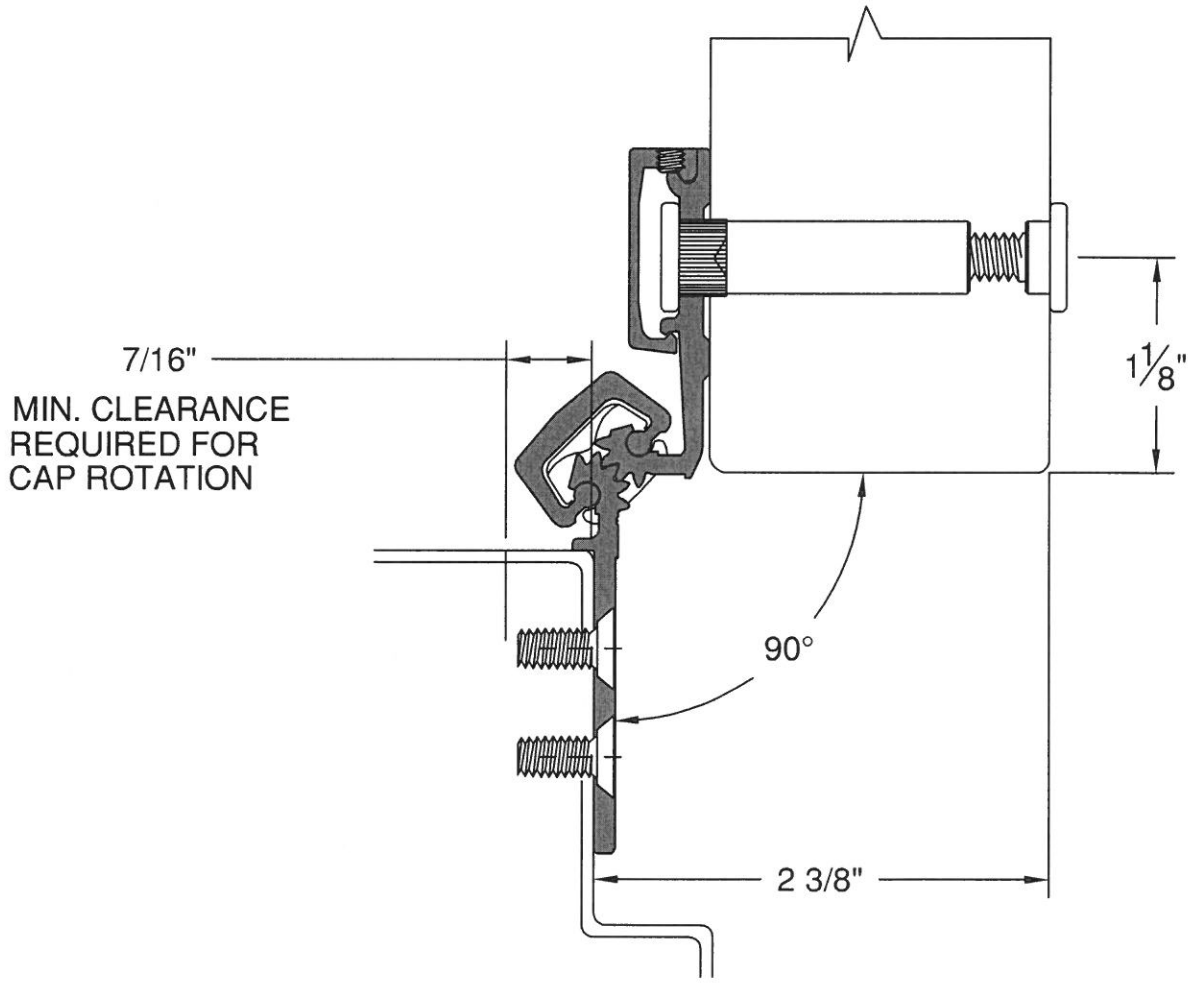

SELECT HINGES™
SELECT Products Limited
9770 Shaver Road Portage, MI 49024
Ph: 800-423-1174 Fax: 800-423-7107
www.select-hinges.com

SL53 HALF SURFACE HINGE

Ives Continuous Hinges are designed to last the life of the building. The unique design distributes the weight of the door along the entire length of the frame, reducing the high amount of stress normally associated at top of door and frame on butt hinge applications. Not only does this reduce hinge failure, it also keeps your door in constant alignment, eliminating the chance of door sag. These characteristics make continuous hinges suitable for high use/high traffic doors.

The design of a continuous hinge eliminates the gap between the door and the frame. The absence of gap also helps prevents finger from being pinched, making it a safer device than traditional hinges. These benefits result in higher efficiency and less maintenance, maximizing the value of your opening investment.

Continuous hinges are available in two styles; aluminum geared and pin and barrel in steel or stainless steel.

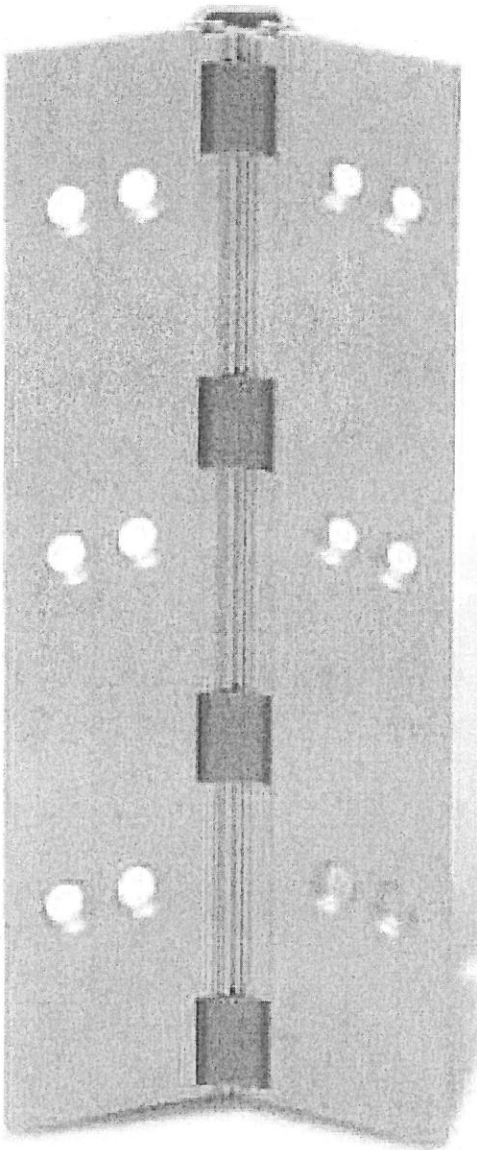

Continuous Hinge Table Of Contents

page

Continuous Hinge Types A14
Cross Reference Guide A15

Aluminum Geared Hinges

General Information A16
Electrified Options A16
How to Order A17
Door Sizing A18
045HD ..... Half Surface A19
046HD ..... Half Surface A19
053HD ..... Half Surface A20
054HD ..... Half Surface A20
112HD ..... Full Mortise A21
157HD ..... Full Surface, Center Pivot A21
210HD ..... Full Surface, Swing Clear A22
224HD ..... Full Mortise, Edge Protector A22
Electrical Cutouts A23

Pin and Barrel Hinges

General Information A24
Electrified Options A24
How to Order A25
Door Sizing A26
600, 700 ..... Full Mortise A27
602, 702 ..... Full Surface A27
611, 711 ..... Swing Clear A28
705 ..... Full Mortise, Full Wrap A28
715 ..... Full Mortise, Full Wrap A29
Electrical Cutouts A30

Aluminum Geared

Geared continuous hinges utilize a single gear section for the leaf and a separate gear section for the frame side of the door. The two are held in place together by a full length cover channel and rotate on a series of bearings.

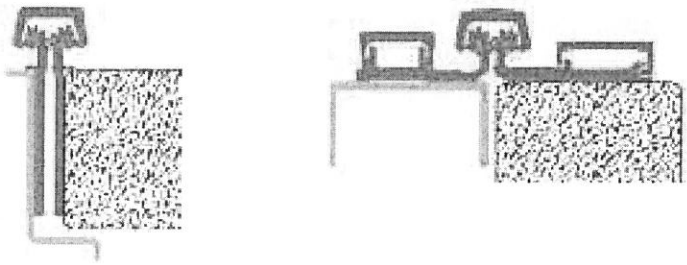

Pin and Barrel

Pin and Barrel hinges share many of the same characteristics of a traditional hinge. Both have a center pin and rolled knuckles. However, a continuous Pin and Barrel hinge stretches along the entire length of the frame. IVES offers both stainless steel and primed steel to best match your specific application.

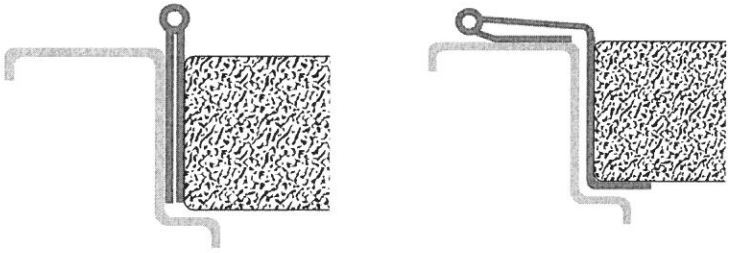

Lifetime Warranty Ives continuous hinges carry a limited lifetime warranty, ensuring your opening will function to your satisfaction every time.

Aluminum Geared Hinges

General Information

Material
6063-T6 Aluminum

Standard Lengths
83", 85", 95", 120"
Custom lengths are available up to 120", consult factory.

Finishes
CL - US28 (628) Clear Anodized
BR - 313AN (710) Dark Bronze

Hinge Duty
All Ives Aluminum Geared Hinges are Heavy Duty (HD).
Amount of bearings varies by size:
- 83" – 32 Bearings
- 85" – 32 Bearings
- 95" – 36 Bearings
- 120"- 47 Bearings

Door Weight
Each hinge can hold a door up to 450 lbs (Rivet nuts recommended) and a max door width of 4'0".

ANSI Certified
All Ives Aluminum Geared Hinges are certified to ANSI 156.26, Grade 1

UL Listed
All Ives Aluminum Geared Hinges are tested and approved UL 10C (90 minutes).

Field Modifications:
All Ives Aluminum Geared Continuous Hinges can be cut to length during installation. The unique mounting pattern allows to cut up to 6" from bottom while still having double row fasteners. If cut more than 13.5", other modifications may be necessary.

Electrification Options

Only available for the full mortise hinges

Electric Power Transfer (EPT)
Electric power transfer provides a means of transferring power from the door frame to the edge of a swinging door. Ives Continuous Hinges provide standard cut outs to fit Von Duprin EPT-2, EPT-10 and PNT-1 devices. Consult factory for other electrical cut out options.

Electrical Through-Wire (TW)
Provides electric power transfer from the frame to the door in order to supply power to an electrified mortise or cylindrical locks, exit devices with electric latch retraction, and/or electric strikes (pairs of doors). Through-wire is rated 50 volts AC/DC at 3.5 amp continuous and 16 amp pulse. Maximum pulse 400 milliseconds. Ives thru-wire hinges are fully compatible with 4 wire and 8 wire installations.

Aluminum Geared Hinges - Clearance Requirements

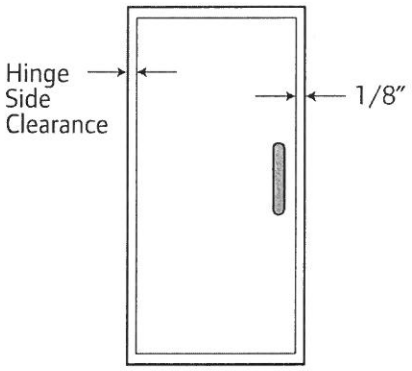

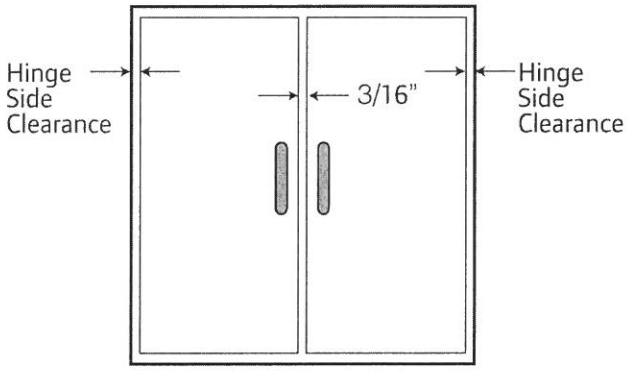

SINGLE DOOR

Model	Hinge-Side Clearance	Lock-Side Clearance	Frame Irregularity	Beveled Door Clearance	Door Under-Sizing Square Edged	Door Under-Sizing Beveled Edged
045HD	5/32"	1/8"	1/32"	1/32"	**5/16"**	**11/32"**
046HD	5/32"	1/8"	1/32"	1/32"	**5/16"**	**11/32"**
053HD	5/32"	1/8"	1/32"	1/32"	**5/16"**	**11/32"**
054HD	5/32"	1/8"	1/32"	1/32"	**5/16"**	**11/32"**
112HD	5/16"	1/8"	1/32"	1/32"	**15/32"**	**1/2"**
224HD	5/16"	1/8"	1/32"	1/32"	**15/32"**	**1/2"**
210HD	1/16"	1/8"	1/32"	1/32"	**7/32"**	**1/4"**
157HD	1/16"	1/8"	1/32"	1/32"	**7/32"**	**1/4"**

PAIR OF DOORS

Model	Hinge-Side Clearance	Lock-Side Clearance	Frame Irregularity	Beveled Door Clearance	Door Under-Sizing Square Edged Total	Door Under-Sizing Square Edged Each Door	Door Under-Sizing Beveled Edged Total	Door Under-Sizing Beveled Edged Each Door
045HD	5/32"	3/16"	1/16"	1/16"	**9/16"**	**9/32"**	**5/8"**	**5/16"**
046HD	5/32"	3/16"	1/16"	1/16"	**9/16"**	**9/32"**	**5/8"**	**5/16"**
053HD	5/32"	3/16"	1/16"	1/16"	**9/16"**	**9/32"**	**5/8"**	**5/16"**
054HD	5/32"	3/16"	1/16"	1/16"	**9/16"**	**9/32"**	**5/8"**	**5/16"**
112HD	5/16"	3/16"	1/16"	1/16"	**7/8"**	**7/16"**	**15/16"**	**15/32"**
224HD	5/16"	3/16"	1/16"	1/16"	**7/8"**	**7/16"**	**15/16"**	**15/32"**
210HD	1/16"	3/16"	1/16"	1/16"	**3/8"**	**3/16"**	**7/16"**	**7/32"**
157HD	1/16"	3/16"	1/16"	1/16"	**3/8"**	**3/16"**	**7/16"**	**7/32"**

Templates and installation instructions available on line at ives.ingersollrand.com

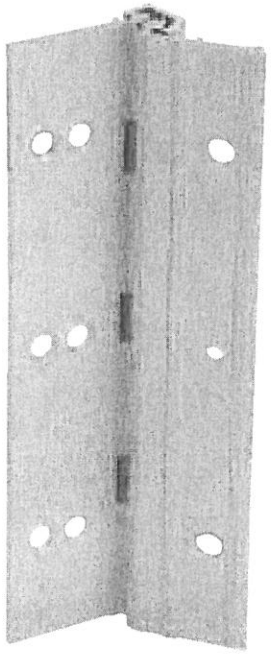

053HD Half Surface Continuous Hinge

- Half surface for retrofit or new construction
- Non-handed
- Frame leaf depth 1-9/16"
- 1/8" door inset

Standard lengths 83", 85", 95", 120"

Standard Mounting Hardware

12-24 x 1/2" steel self tapping screw
1/4-20 x 1-1/2" AL Sex Bolt
1/4-20 x 1" Steel Shoulder Bolt
12-24 x 3/4" Steel Self Drilling Shoulder Bolt
Optional SEC-Security Fasteners available

Finishes

Clear (CL), Dark Bronze (DB)

Custom Anodizing and Painting are available, consult factory.

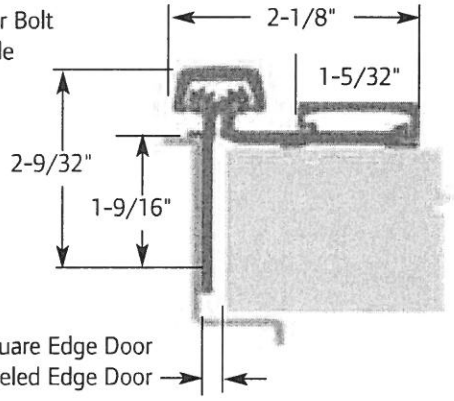

5/32" Clearance for Square Edge Door
3/16" Clearance For Beveled Edge Door

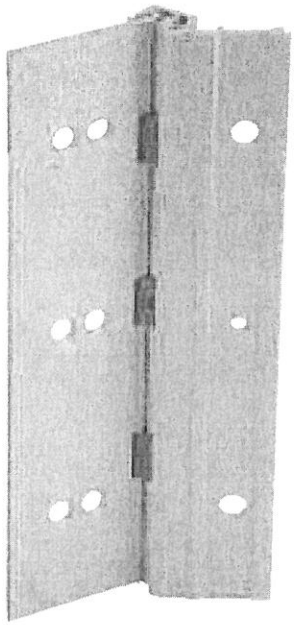

054HD Half Surface Continuous Hinge

- Half surface for retrofit or new construction
- Non-handed
- Frame leaf depth 1-15/16"
- 1/8" door inset

Standard lengths 83", 85", 95", 120"

Standard Mounting Hardware

12-24 x 1/2" steel self tapping screw
1/4-20 x 1-1/2" AL Sex Bolt
1/4-20 x 1" Steel Shoulder Bolt
12-24 x 3/4" Steel Self Drilling Shoulder Bolt
Optional SEC-Security Fasteners available

Finishes

Clear (CL), Dark Bronze (DB)

Custom Anodizing and Painting are available, consult factory.

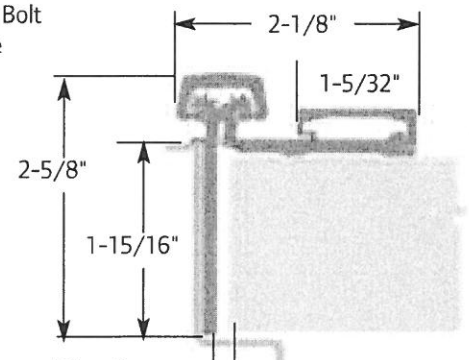

5/32" Clearance for Square Edge Door
3/16" Clearance For Beveled Edge Door

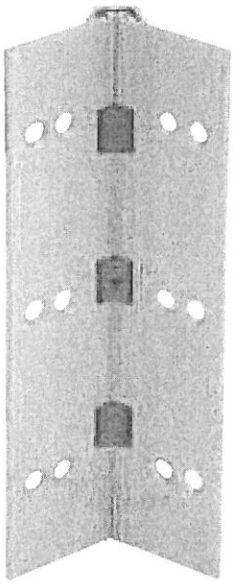

112HD Full Moritse Aluminum Geared Continuous Hinge

- Non Handed
- Flush Mounted, No Inset
- 48" Maximum Door Width
- Beveled or Square Edge Doors

For Doors Weighing up to 450 pounds without reinforcing,
600 pounds with reinforcing

Standard lengths 83", 85", 95", 120"
Standard Mounting Hardware
12-24 X 3/4" Steel Self Drilling, Self Tapping Screws
Optional WD - Wood Screws or SEC - Security Fasteners Available

Finishes
Clear (CL), Dark Bronze (DB)
Custom Anodizing and Painting are available, consult factory.

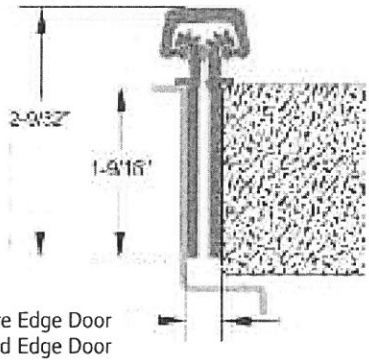

5/16" Clearance for Square Edge Door
1/32" Clearance For Beveled Edge Door

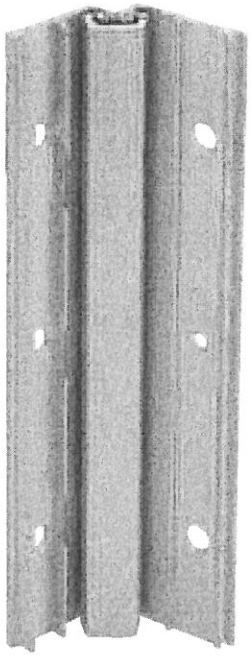

157HD Full Surface, Center Pivot Aluminum Geared Continuous Hinge

- Non Handed
- Narrow Frame
- 1/16" Door Inset
- 48" Maximum Door Width
- Beveled or Square Edge Doors

For Doors Weighing up to 600 pounds

Standard lengths 83", 85", 95", 120"
Standard Mounting Hardware
12-24 X 1/2" Steel Self Tapping Screws,
1/4-20 X 1-1/2" AL Sex Bolt, 1/4-20 X 1" Steel Shoulder Bolt,
12-24 X 3/4" Steel Self Drilling,
Optional SEC - Security Fasteners Available

Finishes
Clear (CL), Dark Bronze (DB)
Custom Anodizing and Painting are available, consult factory.

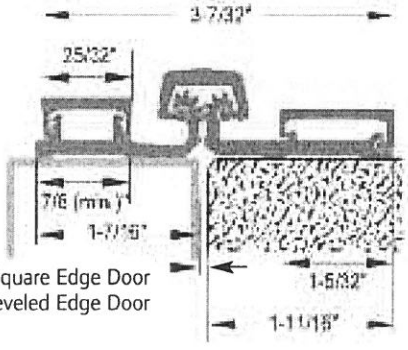

1/16" Clearance for Square Edge Door
3/32" Clearance For Beveled Edge Door

Corbin Russwin

ASSA ABLOY

DC3000 Series

Door Closers

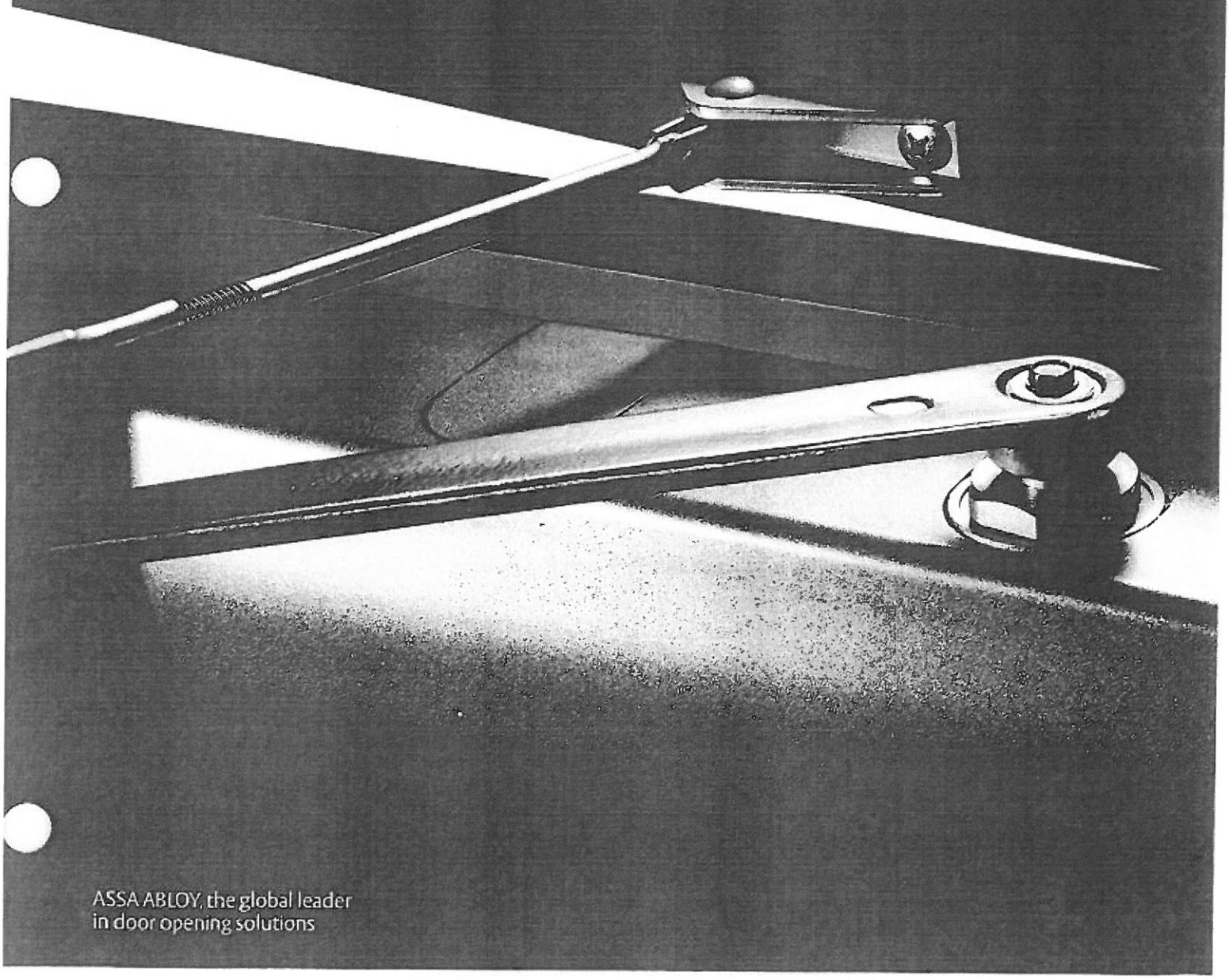

ASSA ABLOY, the global leader
in door opening solutions

Corbin Russwin
ASSA ABLOY

Features

DC3000

Features

Spring Power
Multi-sized; fully adjustable 1 through 6.

Handing
Non-handed.

Body
Cast iron case with seamless cold-headed steel spring tube.

Arm
Standard: forged steel. Optional arms, pages 7 and 8.

Spindle
Cold-headed heat-treated steel.

Piston
1-3/8" diameter; Precision machined, heat-treated steel.

Springs
Chrome silicon wire.

Valves
Latching speed, closing speed and backcheck intensity valves standard. Delayed action valve optional (preset for 20 seconds; between 90° and 70° for all mountings.) To order, specify M71.

Seals
"O" rings.

Fluid
Standard high lubricity extreme temperature hydraulic fluid.

Degree of Opening
Up to full 180° opening standard for regular, top jamb and parallel arm mountings, conditions permitting.

Power Adjustment Arm Bracket
15% adjustment standard.

Cover
Non-metallic full cover.

Mountings
Standard: regular arm and top jamb. Parallel arm or tri-style packaging - specify DC3210
Optional mountings; see page 6.

Mounting Bracket
Quik-Install™ mounting bracket standard.

Fasteners
Standard: self-drilling screws.
Optional: sex nuts and bolts (SNBs); Specify M54.

Corrosion Protection
Painted protective coating on all metal surfaces for use in corrosive environments. Specify M75.

Warranty
Five-year limited warranty. Refer to Corbin Russwin price book for details.

Certification/Compliance

Barrier-Free Code Compliance
The DC3000 Series Door Closers listed below conform to the 5 lbf. maximum door opening force requirement for non-fire-rated interior hinged doors, according to:

Americans with Disabilities Act (ADA)
Complies with the Accessibility Guidelines for Buildings and Facilities, Section 4.13.11.

ANSI/BHMA Certified
A156.4, Grade 1.
A117.1.

UL / ULC / UL10C
Listed for fire and cycle requirements.

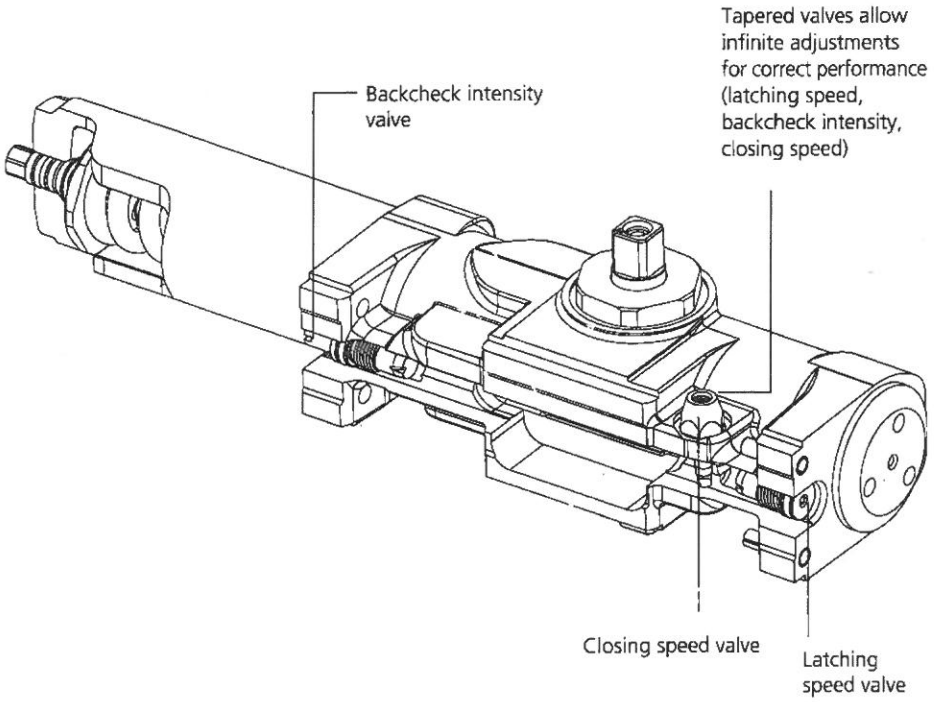

Mountings

DC3000

DC3200 Regular Arm Mounting

- Most common mounting, providing the greatest closing efficiency
- Closer is mounted on the pull side, with the arm perpendicular to the face of the door
- Arm bracket is attached to the door frame

DC3210 Parallel Arm Mounting

- Allows inside application of closer on out-swinging doors
- Closer is mounted on the push side, with the arm parallel to the face of the door
- Arm does not project from the opening

DC3220 Top Jamb Mounting

- Accommodates reveals up to 3-1/4" (83mm)
- Closer is mounted on the push side, with the arm perpendicular to the face of the door
- Arm bracket is mounted on the door
- Minimum 1-3/4" (44mm) top jamb required

Corbin Russwin
ASSA ABLOY

Door Closer Arms

DC3000

540F11
(Non-Hold Open)

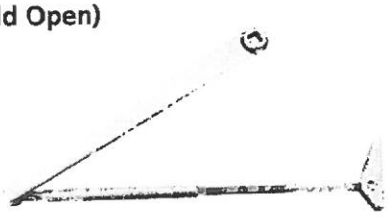

540F13
(Hold Open)

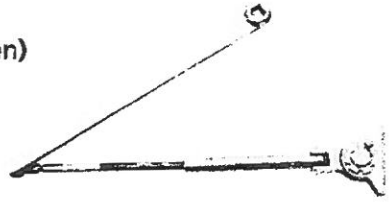

Top Jamb

- Used with top jamb mounting (push side); for reveals up to 3-3/4" (95 mm)
- Non-Hold Open arm standard on the DC3220
- Hold Open arm optional, specify closer x **A1***

689F02
(Non-Hold Open)

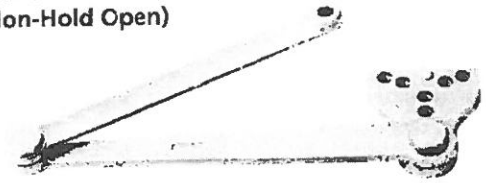

689F01
(Hold Open)

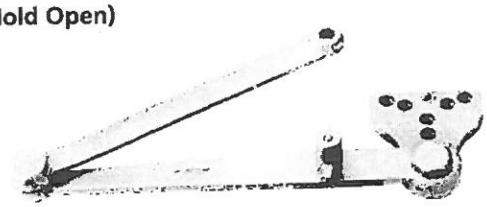

Heavy-Duty Parallel Arm

- Recommended for high-use, high-abuse environments
- Tamper-resistant, solid forged steel riveted arm
- Mounted on push side
- Optional on DC3210 closers
- Non-hold open arm, specify closer x **A3**
- Hold open arm, specify closer x **A2***. Hold-open range 85° to 110°

689F03
(Non-Hold Open)

689F04
(Hold Open)

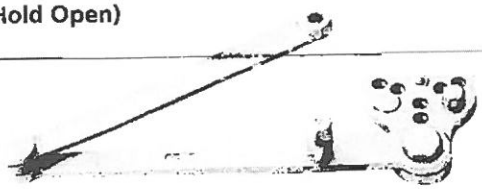

Heavy-Duty Reversible Backstop Parallel Arm

- Recommended for high-use, high-abuse environments
- Tamper-resistant, solid forged steel riveted arm (mounted on push side)
- Field-reversible steel lug restricts degree of opening to protect door, wall and hardware
- Requires both backcheck valves on closer
- Shipped standard as left hand. Handing can be reversed in the field.
- Optional on DC3210 closers
- Non-hold open arm, specify closer x **A4**. Door stop range 85° to 110°
- Hold open arm, specify closer x **A5***. Door stop/hold open range 85° to 110°

***Not allowed by code on fire doors.**

THE AMERICAN INSTITUTE OF ARCHITECTS

AIA Document A310

Bid Bond

KNOW ALL MEN BY THESE PRESENTS, that we Nadeau Corporation
727 Washington Street, South Attleboro, MA 02703
as Principal, hereinafter called the Principal, and International Fidelity Insurance Company
One Newark Center, Newark, NJ 07102-5207
a corporation duly organized under the laws of State of NJ

as Surety, hereinafter called the Surety, are held and firmly bound unto

State of Rhode Island and Providence Plantations
One Capitol Hill, Providence, RI 02908
as Obligee, hereinafter called the Obligee, in the sum of

Five Percent of Amount Bid Dollars ($ 5%),

for the payment of which sum well and truly to be made, the said Principal and the said Surety, bind ourselves, our heirs, executors, administrators, successors and assigns, jointly and severally, firmly by these presents.
WHEREAS, the Principal has submitted a bid for

Lincoln Campus Door Replacement - CCRI Bid/RFP Number 7548430

NOW, THEREFORE, if the Obligee shall accept the bid of the Principal and the Principal shall enter into a Contract with the Obligee in accordance with the terms of such bid, and give such bond or bonds as may be specified in the bidding or Contract Documents with good and sufficient surety for the faithful performance of such Contract and for the prompt payment of labor and material furnished in the prosecution hereof, or in the event of the failure of the Principal to enter such Contract and give such bond or bonds, if the Principal shall pay to the Obligee the difference not to exceed the penalty hereof between the amount specified in said bid and such larger amount for which the Obligee may in good faith contract with another party to perform the Work covered by said bid, then this obligation shall be null and void, otherwise to remain in full force and effect.

Signed and sealed this 14th of March , 2014 .

(Witness)

Nadeau Corporation
(Principal) (Seal)

BY: President
Nadeau Corporation (Title)

(Witness)

International Fidelity Insurance Company
(Surety) (Seal)

BY:
Shelly Andrade (Title) Attorney-in-Fact

INTERNATIONAL FIDELITY INSURANCE COMPANY CORPORATE SEAL 1904 NEW JERSEY

POWER OF ATTORNEY
INTERNATIONAL FIDELITY INSURANCE COMPANY

HOME OFFICE: ONE NEWARK CENTER, 20TH FLOOR
NEWARK, NEW JERSEY 07102-5207

KNOW ALL MEN BY THESE PRESENTS: That **INTERNATIONAL FIDELITY INSURANCE COMPANY**, a corporation organized and existing laws of the State of New Jersey, and having its principal office in the City of Newark, New Jersey, does hereby constitute and appoint

Shelly Andrade as attorney-in-fact to execute the following bond:
Surety Bond Number: Bid Bond
Principal: Nadeau Corporation
Obligee: State of Rhode Island and Providence Plantations

and the execution of such instrument(s) in pursuance of these presents, shall be as binding upon the said INTERNATIONAL FIDELITY INSURANCE COMPANY, as fully and amply, to all intents and purposes, as if the same had been duly executed and acknowledged by its regularly elected officers at its principal office.

This Power of Attorney is executed, and may be revoked, pursuant to and by authority of Article 3-Section 3, of the By-Laws adopted by the Board of Directors of **INTERNATIONAL FIDELITY INSURANCE COMPANY** at a meeting called and held on the 7th day of February, 1974.

The President or any Vice President, Executive Vice President, Secretary or Assistant Secretary, shall have power and authority

(1) To appoint Attorneys-in-fact, and to authorize them to execute on behalf of the Company, and attach the Seal of the Company thereto, bonds and undertakings, contracts of indemnity and other writings obligatory in the nature thereof and,

(2) To remove, at any time, any such attorney-in-fact and revoke the authority given.

Further, this Power of Attorney is signed and sealed by facsimile pursuant to resolution of the Board of Directors of said Company adopted at a meeting duly called and held on the 29th day of April, 1982 of which the following is a true excerpt:

Now therefore the signatures of such officers and the seal of the Company may be affixed to any such power of attorney or any certificate relating thereto by facsimile, and any such power of attorney or certificate bearing such facsimile signatures or facsimile seal shall be valid and binding upon the Company and any such power so executed and certified by facsimile signatures and facsimile seal shall be valid and binding upon the Company in the future with respect to any bond or undertaking to which it is attached.

INTERNATIONAL FIDELITY INSURANCE COMPANY CORPORATE SEAL 1904 NEW JERSEY

IN TESTIMONY WHEREOF, **INTERNATIONAL FIDELITY INSURANCE COMPANY** has caused this instrument to be signed and its corporate seal to be affixed by its authorized officer, this 12th day of March, 2012.

INTERNATIONAL FIDELITY INSURANCE COMPANY
STATE OF NEW JERSEY
County of Essex

Robert W. Minster, Executive Vice-President

On this 12th day of March, 2012., before me came the individual who executed the preceding instrument, to me personally known, and, being by me duly sworn, said the he is the therein described and authorized officer of the **INTERNATIONAL FIDELITY INSURANCE COMPANY**; that the seal affixed to said instrument is the Corporate Seal of said Company; that the said Corporate Seal and his signature were duly affixed by order of the Board of Directors of said Company.

IN TESTIMONY WHEREOF, I have hereunto set my hand affixed my Official Seal,
at the City of Newark, New Jersey the day and year first above written.

JOSE A. MARQUEZ, JR. NOTARY PUBLIC NEW JERSEY

A NOTARY PUBLIC OF NEW JERSEY
My Commission Expires Nov. 21, 2015

CERTIFICATION

I, the undersigned officer of **INTERNATIONAL FIDELITY INSURANCE COMPANY** do hereby certify that I have compared the foregoing copy of the Power of Attorney and affidavit, and the copy of the Section of the By-Laws of said Company as set forth in said Power of Attorney, with the ORIGINALS ON IN THE HOME OFFICE OF SAID COMPANY, and that the same are correct transcripts thereof, and of the whole of the said originals, and that the said Power of Attorney has not been revoked and is now in full force and effect

IN TESTIMONY WHEREOF, I have hereunto set my hand this 14th day of March, 2014

Assistant Secretary

SurePath 08/13

AIA® Document A305™ – 1986

Contractor's Qualification Statement

The Undersigned certifies under oath that the information provided herein is true and sufficiently complete so as not to be misleading.

SUBMITTED TO: State of Rhode Island

ADDRESS: One Capitol Hill
Providence, RI 02908

SUBMITTED BY: Nadeau Corporation

NAME: Ernest J. Nadeau

ADDRESS: 727 Washington Street
South Attleboro, MA 02703

PRINCIPAL OFFICE: Same as above.

[X] Corporation
[ ] Partnership
[ ] Individual
[ ] Joint Venture
[ ] Other

NAME OF PROJECT *(if applicable)*: Lincoln Campus Door Replacement - CCRI, Bid/RFP No. 7548430A4

TYPE OF WORK (file separate form for each Classification of Work):

[X] General Construction
[ ] HVAC
[ ] Electrical
[ ] Plumbing
[ ] Other (please specify)

ADDITIONS AND DELETIONS:
The author of this document has added information needed for its completion. The author may also have revised the text of the original AIA standard form. An *Additions and Deletions Report* that notes added information as well as revisions to the standard form text is available from the author and should be reviewed. A vertical line in the left margin of this document indicates where the author has added necessary information and where the author has added to or deleted from the original AIA text.

This document has important legal consequences. Consultation with an attorney is encouraged with respect to its completion or modification.

This form is approved and recommended by the American Institute of Architects (AIA) and The Associated General Contractors of America (AGC) for use in evaluating the qualifications of contractors. No endorsement of the submitting party or verification of the information is made by AIA or AGC.

§ 1. ORGANIZATION

§ 1.1 How many years has your organization been in business as a Contractor?

30 Years

§ 1.2 How many years has your organization been in business under its present business name?

30 Years

§ 1.2.1 Under what other or former names has your organization operated?

None

§ 1.3 If your organization is a corporation, answer the following:

§ 1.3.1 Date of incorporation: 1984

§ 1.3.2 State of incorporation: Rhode Island

AIA Document A305™ – 1986. Copyright © 1964, 1969, 1979 and 1986 by The American Institute of Architects. All rights reserved. WARNING: This AIA® Document is protected by U.S. Copyright Law and International Treaties. Unauthorized reproduction or distribution of this AIA® Document, or any portion of it, may result in severe civil and criminal penalties, and will be prosecuted to the maximum extent possible under the law. This document was produced by AIA software at 15:20:20 on 07/10/2008 under Order No.1000355669_1 which expires on 5/8/2009, and is not for resale.
User Notes:
(1773698280)

§ 1.3.3 President's name: Ernest J. Nadeau
§ 1.3.4 Vice-president's name(s) Ernest J. Nadeau

§ 1.3.5 Secretary's name: Ernest J. Nadeau
§ 1.3.6 Treasurer's name: Ernest J. Nadeau

§ 1.4 If your organization is a partnership, answer the following:
§ 1.4.1 Date of organization:
§ 1.4.2 Type of partnership (if applicable):
§ 1.4.3 Name(s) of general partner(s)

§ 1.5 If your organization is individually owned, answer the following:
§ 1.5.1 Date of organization:
§ 1.5.2 Name of owner:

§ 1.6 If the form of your organization is other than those listed above, describe it and name the principals:

Not Applicable

§ 2. LICENSING

§ 2.1 List jurisdictions and trade categories in which your organization is legally qualified to do business, and indicate registration or license numbers, if applicable.

Massachusetts, Rhode Island, Connecticut, Maine, New Hampshire Vermont, Nevada, California, Florida, New Jersey, Texas, North Carolina, and South Carolina

§ 2.2 List jurisdictions in which your organization's partnership or trade name is filed.

Not Applicable

§ 3. EXPERIENCE

§ 3.1 List the categories of work that your organization normally performs with its own forces.

Demolition, Masonry, Rough and Finish Carpentry, Drywall Acoustical Ceilings, Doors, Frames, and Hardware

§ 3.2 Claims and Suits. (If the answer to any of the questions below is yes, please attach details.)

§ 3.2.1 Has your organization ever failed to complete any work awarded to it?

No

§ 3.2.2 Are there any judgments, claims, arbitration proceedings or suits pending or outstanding against your organization or its officers?

NO

§ 3.2.3 Has your organization filed any law suits or requested arbitration with regard to construction contracts within the last five years?

No

§ 3.3 Within the last five years, has any officer or principal of your organization ever been an officer or principal of another organization when it failed to complete a construction contract? (If the answer is yes, please attach details.) No

AIA Document A305™ – 1986. Copyright © 1964, 1969, 1979 and 1986 by The American Institute of Architects. All rights reserved. WARNING: This AIA® Document is protected by U.S. Copyright Law and International Treaties. Unauthorized reproduction or distribution of this AIA® Document, or any portion of it, may result in severe civil and criminal penalties, and will be prosecuted to the maximum extent possible under the law. This document was produced by AIA software at 15:20:20 on 07/10/2008 under Order No.1000355669_1 which expires on 5/8/2009, and is not for resale.
User Notes:
(1773698280)

§ 3.4 On a separate sheet, list major construction projects your organization has in progress, giving the name of project, owner, architect, contract amount, percent complete and scheduled completion date.

Please see attached.

§ 3.4.1 State total worth of work in progress and under contract:

Please see attached.

§ 3.5 On a separate sheet, list the major projects your organization has completed in the past five years, giving the name of project, owner, architect, contract amount, date of completion and percentage of the cost of the work performed with your own forces.

Please see attached.

§ 3.5.1 State average annual amount of construction work performed during the past five years:

§ 3.6 On a separate sheet, list the construction experience and present commitments of the key individuals of your organization.

Please see attached.

§ 4. REFERENCES

§ 4.1 Trade References:

Douglas Lumber	Robert N. Karpp Co.	National Lumber
Route 7 & Twin Rd.	825 Summer Street	71 Mapl Street
Smithfield, RI	Boston, MA 02169	Mansfied, MA
401-231-6800	617-269-5880	508-339-8020

§ 4.2 Bank References:

Citizens Bank
870 Westminster Street
Providence, RI 02903
401-884-2846

§ 4.3 Surety:

§ 4.3.1 Name of bonding company: International Fidelity Insurance Co.

§ 4.3.2 Name and address of agent:

USI New England
5700 Post Road
East Greenwich, RI 02818
Mr. Bill Hertle
401-885-5700

§ 5. FINANCING

§ 5.1 Financial Statement.

§ 5.1.1 Attach a financial statement, preferably audited, including your organization's latest balance sheet and income statement showing the following items: Upon specific request, we will forward current Financial Statement.

Current Assets (e.g., cash, joint venture accounts, accounts receivable, notes receivable, accrued income, deposits, materials inventory and prepaid expenses);

Net Fixed Assets;

Other Assets;

AIA Document A305™ – 1986. Copyright © 1964, 1969, 1979 and 1986 by The American Institute of Architects. All rights reserved. WARNING: This AIA® Document is protected by U.S. Copyright Law and International Treaties. Unauthorized reproduction or distribution of this AIA® Document, or any portion of it, may result in severe civil and criminal penalties, and will be prosecuted to the maximum extent possible under the law. This document was produced by AIA software at 15:20:20 on 07/10/2008 under Order No.1000355669_1 which expires on 5/8/2009, and is not for resale.
User Notes:
(1773698280)

Current Liabilities (e.g., accounts payable, notes payable, accrued expenses, provision for income taxes, advances, accrued salaries and accrued payroll taxes);

Other Liabilities (e.g., capital, capital stock, authorized and outstanding shares par values, earned surplus and retained earnings).

§ 5.1.2 Name and address of firm preparing attached financial statement, and date thereof:
DiSanto Priest & Co.
117 Metro Center Boulevard, Suite 300, Warwick, RI 02886

§ 5.1.3 Is the attached financial statement for the identical organization named on page one?

Yes

§ 5.1.4 If not, explain the relationship and financial responsibility of the organization whose financial statement is provided (e.g., parent-subsidiary).

§ 5.2 Will the organization whose financial statement is attached act as guarantor of the contract for construction?
Yes

§ 6. SIGNATURE

§ 6.1 Dated at this 14 day of March, 2014

Name of Organization: Nadeau Corporation

By:

Title: Ernest J. Nadeau, President

§ 6.2

M being duly sworn deposes and says that the information provided herein is true and sufficiently complete so as not to be misleading.

Subscribed and sworn before me this 14 day of Mar 2014

Notary Public: Jean M. Bracci

My Commission Expires: 2/19/18

AIA Document A305™ – 1986. Copyright © 1964, 1969, 1979 and 1986 by The American Institute of Architects. All rights reserved. WARNING: This AIA® Document is protected by U.S. Copyright Law and International Treaties. Unauthorized reproduction or distribution of this AIA® Document, or any portion of it, may result in severe civil and criminal penalties, and will be prosecuted to the maximum extent possible under the law. This document was produced by AIA software at 15:20:20 on 07/10/2008 under Order No.1000355669_1 which expires on 5/8/2009, and is not for resale.
User Notes: (1773698280)

NADEAU CORPORATION

Construction Development & Engineering

Work In Progress

PROJECT TITLES & LOCATIONS	WORK CATEGORY	START AND END DATES	ON SCHEDULE (YES/NO)	CONTRACT PRICE	% NOT COMPLETE	$VALUE OF WORK NOT COMPLETE	NO. OF YEARS REMAINING	ANNUALIZED VALUE OF INCOMPLETE WORK
RI Air National Guard								
North Smithfield, RI	GC	1/13 - 6/14	Yes	$ 1,050,000.00	80%	$ 840,000.00	1	$ 840,000.00
Security Fence No. Smithfield ANGS								
Dept. of the Army National Guard, MA								
Camp Edwards, Bourne, MA	GC	3/13 - 3/14	Yes	$ 1,100,550.00	1%	$ 11,005.50	1	$ 11,005.50
Building 1200 Improvements								
Rhode Island Public Transit Authority								
Various Rhode Island Locations	GC	5/13 - 6/14	Yes	$ 506,150.00	15%	$ 75,922.50	1	$ 75,922.50
Ticket Vending Machines								
Wong Holdings LLC								
670 Washington Street, Attleboro, MA	GC	7/13 - 5/14	Yes	$ 590,000.00	50%	$ 295,000.00	1	$ 295,000.00
Renovation and Addition								
Attleboro YMCA								
Attleboro, MA	GC	7/13 - 3/14	Yes	$ 595,000.00	40%	$ 238,000.00	1	$ 238,000.00
Auget Family Adventure Center								
Barry & Simpson Halls								
Cranston, RI	GC	7/13 - 3/14	Yes	$ 3,100,000.00	25%	$ 775,000.00	1	$ 775,000.00
Window, Roof, and Masonry Restoration								
Seekonk Banna Fire Station								
Seekonk, MA	GC	10/13 - 6/14	Yes	$ 1,197,500.00	70%	$ 838,250.00	1	$ 838,250.00
New Modular Fire Station								
RIPTA Lifelines								
Providence, RI	GC	4/14 - 6/30	Yes	$ 75,000.00	100%	$ 75,000.00	1	$ 75,000.00
Installation of Fall Protection								

Rhode Island Medical Imaging East Providence, RI New Medical Imaging Suite	GC	3/14 - 9/14	Yes	$ 1,000,000.00	99%	$ 990,000.00	1	$ 990,000.00
New England Access Treatment Franklin, MA New Cultivation Facility / Renovations	GC	3/14 - 9/14	Yes	$ 5,000,000.00	98%	$ 4,900,000.00	1	$ 4,900,000.00

NADEAU CORPORATION

Construction Development & Engineering

Work in Progress

PROJECT TITLE		COMPANY NAME	CONTACT PERSON	TELEPHONE
RI Air National Guard	Owner:	RI Air National Guard	Lt. Timothy Caron	401-275-4282
No. Smithfield, RI	GC:	Nadeau Corporation	Mark Menard	508-399-6776
Security Fence No. Smithfield ANGS	Designer	RI Air National Guard	Lt. Timothy Caron	401-275-4282
MA - Army National Guard	Owner:	National Guard	Enrico Cappucci	339-202-3934
Camp Edwards, Bourne, MA	GC:	Nadeau Corporation	Dave D'Angelo	508-399-6776
Building 1200 Renovations	Designer	Atkins		305-592-7275
Rhode Island Public Transit Authority	Owner:	RIPTA	Michael McGrane	401-784-9500
Various Rhode Island Locations	GC:	Nadeau Corporation	Mark Menard	508-399-6776
Ticket Vending Machines	Designer	N/A		
Wong Holdings Inc.	Owner:	Wong Holdings LLC	Baily Long	508-399-8020
670 Washington St., Attleboro, MA	GC:	Nadeau Corporation	Mark Menard	508-399-6776
Renovations & Addition	Designer	SAB Engineering	Steve Bogle	508-672-3875
Attleboro YMCA	Owner:	Attleboro YMCA	Robin McDonald	508-222-7422
Attleboro, MA	GC:	Nadeau Corporation	Mark Menard	508-399-6776
Auget Family Adventures Center	Designer	Annino Incorporated	Doug Annino	508-643-4554
Seekonk Banna Fire Station	Owner:	Seekonk Selectmen's Office	Pam Nolan	508-336-2912
Seekonk , MA	GC:	Nadeau Corporation	Dave D'Angelo	508-399-7270
New Modular Fire Station	Designer	Bount Bennett Architects	Jim Marshall	401-431-1922
RIPTA Lifelines	Owner:	RIPTA	Michael McGrane	401-784-9500
Providence, RI	GC:	Nadeau Corporation	Mark Menard	508-399-6776
Installtion of Fall Protection	Designer	RGB Architects	John Racine	401-272-1730
Rhode Island Medical Imaging	Owner:	Rhode Island Medical Imaging	Janet Petrarca	401-432-2453
East Providence, RI	GC:	Nadeau Corporation	Mark Menard	508-399-6776
New Medical Imaging Suite	Designer	Vision 3 Architects	David Parentee	401-461-7771
New England Access Treatment	Owner:	N. E. Treatment Access Facility	Arnon Vered	
Franklin, MA	GC:	Nadeau Corporation	Ernest Nadeau	508-399-6776
New Cultivation Facility / Renov.	Designer	Vision 3 Architects	Keith Davingnon	401-461-7771

PROJECT LIST
NADEAU CORPORATION
CONSTRUCTION DEVELOPMENT & ENGINEERING

727 Washington Street
South Attleboro, Massachusetts 02703
(508) 399-6776
Revised – 2014

OWNER & REPRESENTATIVE	PROJECT DESCRIPTION	YEAR COMPLETED	CONTRACT AMOUNT
AA Thrifty Sign 221 Jefferson Boulevard Warwick, RI 02886 *Mr. George Daubmann* *(401) 738-7100*	Addition to Existing Metal Building Warwick, Rhode Island	1999	$220,000
AB INITIO, LLC 5 Canonicus Trial East Greenwich, RI *Mr. Eric Lewis* *401-212-7833*	Jimmy Johns Restaurant Renovations	2006	$117,500
Adventure Isle 340 McCarthur Blvd. Bourne, MA *Mr. Dan DeLuca* *508-477-2765*	25,500 Sq. Ft. Family Recreation Facility	2004	$2,367,161
AIM Products 25 Kenney Drive Cranston, RI 02920 *Mr. Karl Seelig* *(401) 463-5605*	Interior Renovations 25 Kenney Drive Cranston, Rhode Island	1998	$275,000
AIM Products 25 Kenny Drive Cranston, RI 02920 *Mr. Karl Seelig* *401-463-5605*	Building Addition / Interior Renovations	2008	$157,640

Alliance Imaging 246 East Main Road Norton, MA Mr. Bob Currie 860-670-5440	Interior Renovations MRI Ctr.	2004	$406,000
Alliance Imaging 5 Durfee Union Mills Plymouth Ave. Fall River, MA Mr. Bob Currie 860-670-5440	Primacare, Fall River, MA Interior Renovations to MRI Ctr.	2004	$450,754
Amica Mutual Insurance 43 Western Boulevard Glastonbury, CT 06033 *Mr. Robert Lake* *(401) 334-6000*	Lobby Renovations	1999	$44,600
Amica Mutual Insurance 45 William Street Wellesley, MA 02181 *Mr. Robert Lake* *(401) 334-6000*	Lobby & Interior Renovations	1999	$39,600
APM - Sterngold 23 Frank Mossberg Drive Attleboro, MA 02703 *Mr. Dave Selander* *(508) 226-5660*	Interior Renovations Attleboro, Massachusetts	1985	$300,000
Army National Guard *OMS #6* 98 Montaunk Street Brockton, MA	New Concrete Vehicle Slab	2004	$82,810
AMCAP Cowesette Corners Warwick, RI *Mr. Steve Smith* *781-628-6228*	Cowesett Retail Outlet Renovation	2005	$115,000

AmCap 1281 East Main Street Stamford, CT 06902 *Mr. Jay Kaiser* *203-327-2001*	Cowesett Retail Outlet Renovations Interior / Exterior	2006	$1,438,000
AmCap 1281 East Main Street Stamford, CT 06902 *Mr. Jay Kaiser* *203-327-2001*	Panda Island Renovations Interior / Exterior	2007	$77,000
AmCap 1281 East Main Street Stamford, CT 06092 *Mr. Jay Kaiser* *203-327-2001*	Tennant Fit Out	2007	$200,000
Arcadia Management Area Route 165 Check Station Exeter, RI Mr. J. McGinn 401-222-2776	Pre-Engineered Metal Building	2011	$291,142
Arlington Town Hall 730 Massachusetts Ave. Arlington, MA *Mr. Domenic Lanzillotti* *781-316-3005*	Building B Renovations 51 Grove Street	2010	$372,980
ARTCO Offset Inc. 155 Will Dr. Canton, MA *Mr. Bill McDole* *617-423-1044*	Office and Warehouse renovations	2001	$401,000
Atlantic Commercial Diagnostic Facility 250 Tollgate Road Warwick, RI 02888 *Ms. Sarah Dowling* *401-272-7400*	New MRI Facility	2004	$1,381,750

Attleboro Enterprises 284 John L. Dietsch Boulevard North Attleboro, MA 02763 *Mr. Jerry Pilkington* *508-695-4046*	Construction of 3 Group Homes	2002	$1,100,000
Attleboro Enterprises 284 John L. Dietsch Boulevard North Attleboro, MA 02763 *Mr. Jerry Pilkington* *508-695-4046*	Addition & Renovations	2010	$1,440,000
Attleboro Public Schools Ruthbun Willard Drive Attleboro, MA 02703 *Mr. Joseph Delude* *(508) 222-0012*	Resource Center Reconstruction Peter Thatcher Middle School Attleboro, Massachusetts	1988	$150,000
Attleboro YMCA Main Street Attleboro, MA 02703 *Mr. Doug Annino* *508-643-4554*	Auget Family Adventure Center	In Progress	$595,000
Augat, Inc. 33 Perry Avenue Attleboro, MA 02703 *Mr. Bill Frignon* *(508) 222-2202*	Interior Renovations to Manufacturing & Office Facilities Attleboro, Massachusetts	1985	$298,000
Barnstable Police Station 1200 Phinneys Lane Barnstable, MA *Mr. Jim Steward* *508-862-4087*	Station Addition	2004	$1,427,524
Town Of Barnstable Dept. of public works 230 South Street, 4th Floor Hyannis, MA 02601 *Mr. John Juros* *508-790-6324*	Bismore Park Renovations New Visitor Center	2008	$926,815

Town of Barnstable 367 Main Street Hyannis, MA 02601 *Mr. Mark Marinaccio* *508-790-6323*	Structural Repairs at the old Selectmen's Building	2013	$116,900
County of Barnstable Superior Court House P.O. Box 427 Barnstable, MA 02360 *Ms. Elaine Davis* *508-375-6637*	Structural Steel Mezzanine Addition/ Former House of Corrections	2012	$309,900
County of Barnstable Superior Court House P.O. Box 427 Barnstable, MA 02360 *Elaine Davis* *508-375-6637*	Cold Metal Framing for the Pre-Engineered Steel Gymnasium at the Former House of Corrections	2012	$388,200
Barry & Simpson Halls State of Rhode Island One Capitol Hill Providence, RI Mr. Dan Nichols 401-272-1730	Window, Roof, & Masonry Restoration	In Progress	$3,100,000
Bikes Not Bombs 59 Amory Street #103A Roxbury, MA 02119 *Mr. Carl Kutz* *617-442-0004*	Interior Renovations	2006	$124,700
Bikes Not Bombs 59 Armory Street #103A Roxbury, MA 02119 Mr. Carl Kurz 617-442-0004	Renovations Bartlett Square	2007	$68,000

Bird Machine Company 100 Neponset Street South Walpole, MA 02071 *Mr. Frank Murray* *(508) 668-0400*	Office Renovations South Walpole, Massachusetts	1991	$475,000
Bliss Brothers Dairy 711 Park Street Attleboro, MA 02703 *Mr. Kent Bliss* *(508) 222-0787*	New Restaurant and Deli Tri-Boro Plaza North Attleboro, Massachusetts	1987	$500,000
Brainin/Advance Industries 48 Frank Mossberg Drive Attleboro, MA 02703 *Mr. Alan Huffenus* *(508) 222-3151*	Manufacturing Addition and Renovations	2002	$2,700,000
Brainin/Advance Industries 48 Frank Mossberg Drive Attleboro, MA 02703 *Mr. Ed Kruezer* *(508) 222-3151*	New 150' x 175' Pre-engineered Building Attleboro, Massachusetts	1990	$1,000,000
Brainin/Advance Industries 48 Frank Mossberg Drive Attleboro, MA 02703 *Mr. John White* *(508) 222-3151*	New 100' x 200' Pre-engineered Building Attleboro, Massachusetts	1986	$450,000
Bridgewater Goddard Park Medical Assoc. 110 Liberty Street Brockton, MA *Mr. Kevin McManus* *978-369-1290*	Building Addition, MRI Center	2004	$125,000
Bridgewater State College Park Street Bridgewater, MA *Ms. Karen Jason* *508-531-2750*	Maxwell Library	2004	$1,044,169

Bridgewater State College 131 Summer Street Bridgewater, MA *Ms. Karen Jason* *508-531-2750*	Tingsley Room Modifications	2005	$14,280
Bridgewater State College 131 Summer Street Bridgewater, MA *Ms. Karen Jason* *508-531-2750*	Moakley Class Renovations	2005	$22,720
Bridgewater State College 131 Summer Street Bridgewater, MA *Mr. Thomas Telford* *508-531-2953*	Elevator Replacement	2010	$367,400
Bunge North America 38 Colfax Street Pawtucket, RI 02860 *Mr. Tony Ferri* *401-724-3800*	Reconstruction Of A Fire Damaged Building	2006	$85,000
Town of Bristol Housing Authority 1014 Hope Street Bristol, RI 02809 *Ms. Dolores Floor* *(401) 253-4464*	Benjamin Church Manor Apartment Renovations Bristol, Rhode Island HUD Funded	1996	$346,800
Town of Bristol Housing Authority 1014 Hope Street Bristol, RI 02809 *Ms. Dolores Floor* *(401)253-4464*	Apartment Renovations HUD Funded	2002	$170,000
Bristol Community College 777 Elsbree Street Fall River, MA 02720 *Mr. Leo Recine* *508-678-2811*	Garage Expansion to Building "F"	2001	$229,000

Brook Manor Inc. 142 Elm Street No. Attleboro, MA 02706 *Mr. Robert Scolleteli* *(508) 695-9000*	Interior Renovations Brook Manor Restaurant North Attleboro, Massachusetts	1997	$135,000
Brown University Plant Operations/60 Olive Street Providence, RI 02912 *Mr. Paul Dietel* *(401) 863-7850*	Exterior Restorations 96 Waterman Avenue Providence, Rhode Island	1998	$179,500
Canton Public Schools 760 Washington Street Canton, MA *Mr. Ken Leon* *781-821-5060*	Installation of an elevators to the Hanson and JFK School	2004	$619,688
Cape Cod Community College 2240 Iyannough Road West Barnstable, MA 02668 *Mr. Jim Riordam* *508-362-2131*	Zammer Institute Kitchen Renovations	2009	$378,455
Chariho Regional School District 455A Switch Road Wood River Jct., RI 02894 *Mr. Brian Stanley* *(401) 364-3260*	Roofing & Ventilation Upgrades, Richmond Elementary School	1999	$218,000
Chariho Regional School District 455A Switch Road Wood River Jct. RI 02894 *Mr. Brian Stanley* *(401) 364-3260*	Re-roofing Charlestown Elementary School	2000	$226,000
Chariho Regional School District 455A Switch Road Wood River Jct., RI 02894 *Mr. Brian Stanley* *(401) 364-3260*	Chariho High School Door Replacement	2008	$341,334

Chariho Regional School District 455A Switch Road Wood River Junction, RI *Mr. Brian Stanley* *401-364-3260*	Chariho Technical Center Welding Lab Renovation	2009	$65,000
Chariho Regional School District 455 A Switch Road Wood River Junction, RI *Mr. Brian Stanley* *401-364-3260*	Richmond Elementary School Bathroom Renovation	2009	$103,000
Chariho Regional School District 455 A Switch Road Wood River Junction, RI *Mr. Brian Stanley* *401-364-3260*	Chariho Middle School Addition 3 Classroom Addition	2010	$668,000
Chariho Regional School District 455 A Switch Road Wood River Junction, RI *Mr. Brian Stanley* *401-364-3260*	Chariho Middle School Technology & Maintenance Building	2010	$1,342,000
Chatham Pottery 2058 Main Street South Chatham, MA 02633 *Mr. Gill Wilson* *(508) 430-2191*	5500 Square Foot Metal Building South Chatham, Massachusetts	2000	$160,000
Chemet Corporation Gardner Street Attleboro, MA 02703 *Mr. Sid Jost* *(508) 226-4470*	Addition to Existing Facility Attleboro, Massachusetts	1985	$160,000
City of Boston, MA Boston School Dept. Office of Facilities & Planning 26 Court Street Boston, MA 02108 *Mr. Dan McLean* *617-635-8300*	Beethoven School Kindergarten Bathroom Renovation	2009	$75,000

Clark County, Nevada Economic Opportunity Board Las Vegas, NV 89103 *Mr. Wayne Schreiner, Architect* *(702) 383-0077*	Addition to Senior Citizens Day Care Center Hollyhock Adult Day Care Center Las Vegas, Nevada	1991	$121,500
Community Development for Attleboro, Inc. 199 County Street Attleboro, MA 02703 *Ms. Sheila Tondreau* *(508) 226-5116*	Gordon Larson Senior Center Apartment Renovations Attleboro, Massachusetts HUD Funded	1996	$498,500
Crossroads Rhode Island Broad Street Providence, RI *Mr. Michael Welco* *401-521-2255*	YMCA – Elevator Infill	2005	$29,800
The Town of Dedham 26 Bryan Street Dedham, MA 02026 *Mr. Greg Carell* *(508) 497-0909*	Dedham Town Buildings Handicap Upgrade Dedham, Massachusetts	1997	$337,272
Demers Brothers Trucking 453 South Main Street Attleboro, MA 02703 *Mr. Robert Demers* *(508) 222-2181*	Fire Restorations Dodgeville Mill Attleboro, Massachusetts	1994	$92,791
Dennison Memorial Gymnasium 755 South First Street New Bedford, MA 02740 *Mr. Sean Hargraves* *(508) 996-2691*	Construction of 8100 SF Pre-engineered Metal Bldg. To be used as gymnasium with 1500 SF Office Area	1999	$409,000
Dennison Memorial Gymnasium 755 South First Street New Bedford, MA 02740 *Mr. Sean Hargraves* *508-996-2691*	New 12,000 sq. ft. Youth Education Facility	2004	$989,000

Department of Corrections 50 Maple Street Milford, MA 01757 *Mr. Paul Hession* *508-422-3300*	Roof, Masonry and Stair Repairs- Laurel Hall at North Central, Gardner, MA	2012	$319,800
Department of Corrections 50 Maple Street Milford, MA 01757 Mr. Paul Hession 508-422-3300	H.S.U. Cell Door Replacement MCI Framingham	2012	$316,000
Discovery House 1319 Cranston Street Cranston, RI 02920 *Mr. David Piccoli* *(401) 944-4540*	Office Renovations Providence, Rhode Island	1995	$95,000
Discovery House 1319 Cranston Street Cranston, RI 02920 *Mr. David Piccoli* *(401) 944-4540*	Additions & Renovations 400 Western Avenue South Portland, Maine	1999	$150,000
Discovery House 66 Pavilion Ave. Providence, RI 02905 *Mr. David Piccoli* *401-780-2300*	Portland, Maine Renovations	2006	$90,000
Discovery House 66 Pavilion Ave. Providence, RI 02905 *Mr. David Piccoli* 401-780-2300	Bangor, Maine Renovations	2007	$35,000
Discovery House 66 Pavilion Ave. Providence, RI *Mr. Joe Renzi* *401-780-2300*	Bangor, Maine Renovations	2008	$79,500

Discovery House 66 Pavilion Ave. Providence, RI 02905 *Mr. Mike Cabral* *401-780-2300*	Woonsocket, RI Renovations	2011	$150,800
Discovery House 66 Pavilion Ave. Providence, RI *Mr. Mike Cabral* *401-780-2300*	Harrisburg, PA Renovations	2010	$101,430
Discovery House 66 Pavilion Ave. Providence, RI *Mr. Mike Cabral* *401-780-2300*	Duncansville, PA Renovations	2011	$39,690
Discovery House 66 Pavilion Ave. Providence, RI *Mr. Mike Cabral* *401-780-2300*	New Castle, PA Renovations	2011	$146,100
Discovery House 66 Pavilion Ave. Providence, RI *Mr. Mike Cabral* *401-780-2300*	Huntingdon Valley, PA Renovations	2011	$250,000
East Bay Mental Health Center, Inc. Two Old County Road Barrington, RI 02806 *Ms. Carol Moser* *(401) 246-1195*	Renovations to Create Six Apartments Bristol, Rhode Island	1994	$224,120
East Bay Mental Health Center, Inc. Two Old Colony Road Barrington, RI 02806 *Mr. Ken Satterly* *(401) 246-1195*	Addition and Renovations Including New Elevators East Providence, Rhode Island	1999	$170,000

Elmwood Neighborhood Revitalization LP One Trinity Square Providence, RI 02903 *Ms. Diana Dumont* *(401) 273-2330*	Elmwood Revitalization Project New and Existing Construction Providence, Rhode Island	2000	$2,650,000
Engelhard Industries Route 152 Plainville, MA 02762 *Mr. Kevin Quinn* *(508) 695-7811*	Addition & Chemical Laboratory Renovation Plainville, Massachusetts	1987	$237,500
Environmental Chemical Corp. 5 Kittridge Road Otis ANGB, MA 02649 *Ms. Trish Hines* *508-563-9727*	Water Treatment Facility	2003	$279,000
Environmental Systems, Inc. 6 Howard S. Ireland Drive Attleboro, MA 02703 *Mr. Bob Elliott* *(508) 226-6006*	Renovations	2000	$150,000
Fall River Cable Television 800 Warren Street Fall River, MA 02722 *Ms. Mary Sevey* *(508) 675-1171*	Head End Building Fall River, Massachusetts	1989	$130,000
Frito-Lay 160 Nutmeg Road South South Windsor, CT 06074 Mr. Jeffrey Hermann	Metal Building Completion	2000	$34,000
G. Brouilette & Sons 770 Broadway Raynam, MA 02767 *Mr. Lionel Larivee* *508-822-0068*	Hanover YMCA Metal Roofing	2002	$88,000

General Metal Finishing Company 42 Frank Mossberg Drive Attleboro, MA 02703 *Mr. Bob Palos* *(508) 222-9683*	Design/Build New Office & Manufacturing Facility Attleboro, Massachusetts	1985	$522,000
General Metal Finishing Company 42 Frank Mossberg Drive Attleboro, MA 02703 *Mr. Bob Palos* (508) 222-9683	Office & Chemical Storage Addition Attleboro, Massachusetts	1987	$368,000
GATRA 10 Oak Street Taunton, MA 02780 *Ms. Carol Gill* *508-823-8828*	Attleboro Commuter Rail Station Improvements Project	2009	$623,592
Handy & Harman 231 Ferris Avenue East Providence, RI 02916 *Mr. Leonard Doresett* *(401) 434-6543*	Loading Dock & Control Room Alterations East Providence, Rhode Island	1986	$118,400
Handy & Harman 231 Ferris Avenue East Providence, RI 02916 *Mr. David Kelly* *(401) 434-6543*	Shop Demolition East Providence, Rhode Island	1996	$25,000
Handy & Harman 231 Ferris Avenue East Providence, RI 02916 *Mr. David Kelly* *(401) 434-6543*	Production and Met Lab Renovations East Providence, Rhode Island	1996	$50,000
Handy & Harman 231 Ferris Avenue East Providence, RI 02916 *Mr. David Kelly* *(401) 434-6543*	Vault Repairs East Providence, Rhode Island	1996	$12,000

Handy & Harman 231 Ferris Avenue East Providence, RI 02916 *Mr. David Kelly* *(401) 434-6543*	Chemical Storage Building Addition East Providence, RI	1999	$140,000
Hanna Instruments Highland Industrial Park 584 Park East Drive Woonsocket, RI 02895 *Mr. Carl Silvaggio* *(401) 765-7500*	Addition Woonsocket, Rhode Island	1995	$216,000
Hanna Instruments Highland Industrial Park 584 Park East Drive Woonsocket, RI 02895 *Mr. Carl Silvaggio* *(401) 765-7500*	Building Addition Woonsocket	2008	$1,700,000
Hanna Instruments Highland Industrial Park 584 Park East Drive Woonsocket, RI 02895 *Mr. Martino Nardo* *(401)765-7500*	Building Renovation North Smithfield, RI	2012	$1,166,386
Hanna Insturments Highland Industrial Park 584 Park East Drive Woonsocket, RI 02895 *Mr. Martino Nardo* *(401)765-7500*	Building Renovations North Smithfield, RI	2012	$121,758
Hurd Buick, GMAC 1705 Hartford Ave. Johnston, RI 02919 *Mr. Chris Hurd* *401-751-6000*	Expansion	2005	$477,900

Innovative Medical Solutions 99 Cooper Lane P.O. Box 525 Stafford Springs, CT 06076 *Mr. Robert Curry* *860-851-9437*	Truesdale Clinic Fall River, MA Addition	2009	$312,000
Innovative Medical Solutions 99 Cooper Lane P.O. Box 525 Stafford Springs, CT 06076 *Mr. Robert Curry* *860-851-9437*	New Building for MRI Valley Hospital, Paramus, NJ	2008	$438,300
International Manufacturing Services 50 School House Lane Portsmouth, RI 02871 *Mr. Lionel Laarivee* *508-822-0068*	Metal Building Addition Portsmouth, RI	2002	$335,000
Interplex Metals 54 Venus Way Attleboro, MA 02703 *Mr. David Postisil* *508-399-6810*	Equipment Foundation	2008	$15,000.00
JT's Lumber 6000 Poast Road North Kingstown, RI 02852 *Michael S. McDole* *(401) 884-5400*	Pre-Engineered Metal Storage Building	2000	$350,000
Jennings Restaurant 383 Washington Street South Attleboro, MA 02703 *Mr. Justin Jennings* *(508) 761-7310*	Addition & Renovations South Attleboro, Massachusetts	1990	$300,000.
John E. Fogerty Center 221 Woonasquatucket Ave. North Providence, RI 02911 *Mr. Frank DiMaio* *401-353-7000*	Bucklin Street Renovations	2004	$76,300

John E. Fogarty Center 221 Woonasquatucket Ave. North Providence, RI 02911 *Mr. Frank DiMaio* *401-353-7000*	The Picillo Center Building Addition	2008	$1,170,686
John E. Fogarty Center 221 Woonasquatucket Ave. North Providence, RI 02911 *Mr. Frank DiMaio* *401-353-7000*	LaPlante Center Renovations	2007	$140,000
Key-Tech, Inc. 1280 Jefferson Boulevard Warwick, RI 02888 *Mr. Marc Miller* *(401) 732-7788*	Interior Renovations for Office and Manufacturing Space 60,000 square feet Warwick, Rhode Island	1995	$1,250,000
Larson Tool & Stamping 90 Olive Street Attleboro, MA 02703 *Mr. Chuck Cederberg* *508-226-0981*	Metal Building Addition	2007	$950,000
Ann Law P.O. Box 488 Grace's Cove Block Island, RI 02807 *Ms. Ann Law* *(401)499-2222*	Exterior & Interior Finish Work	2004	$112,500
Leach & Garner Company General Findings Division 57 John L. Dietsch Square North Attleboro, MA 02703 *Mr. Marinko Markic* *(508) 695-7800*	Interior Renovations 57 John L. Dietsch Square North Attleboro, MA	1997	$20,000

Leach & Garner Company General Findings Division 57 John L. Dietsch Square North Attleboro, MA 02703 *Mr. Marinko Markic* *(508) 695-7800*	Interior Renovations 57 John L. Dietsch Square North Attleboro, MA	1999	$10,000
LeachGarner 49 Pearl Street Attleboro, MA 02703 *Mr. Joe White* *508-695-7800*	Office Renovations	2012	$455,749
LeachGarner 49 Pearl Street Attleboro, MA 02703 *Mr. Joe White* *508-695-7800*	Coolant Water System	2013	$173,800
Linbeck Group, LP 27 Park Street Hyannis, MA 02601 *Mr. Ward Jaros* *(508) 862-9387*	Cape Cod Hospital 10,000 Sq. Ft. Steel Building	2005	$210,000
Mansfield Animal Shelter 175 Fruit Street Mansfield, MA *Mr. Lou Andrews* *508-339-4155*	Pre-Engineered Metal Building	2009	$175,000
Mass State Police 470 Worcester Road Framingham, MA Mr. Gerry Densmore 508-820-2121	Emergency Generator Replacement	2008	$578,000
Metalor 255 John Dietsch Boulevard North Attleboro, MA 02762 *Mr. John F. Healy, Jr.* *(508) 699-8800*	Interior Demolition and Construction of Dental Office North Attleboro, Massachusetts	1996	$4,500

Metalor 255 John Dietsch Boulevard North Attleboro, MA 02762 *Mr. Tom Oldham* *508-699-8800*	Addition & Renovation	2009	$1,040,000
Dr. Jason Michaels Barrington Medical Center 1525 Wampanoag Trial East Providence, RI *Dr. Jason Michaels* *702-588-7447*	Suite 203 Interior Renovations	2011	$65,000
Myles Standish Medical Office Building 100 Industrial Park Road Taunton, MA *Mr. Frank Smith* *603-434-6700*	New 12,000 sq. ft. Building Shell	2011	$2,316,225
MA National Guard JFHQ_MA Military Division 2 Randolph Road Hanscom AFB, MA 01731 *Mr. Enrico Cappucci* *339-202-3934*	BOQ Energy Improvements Upgrades Camp Edwards, Bourne, MA	2014	$1,162,180
MA National Guard JFHQ_MA Military Division 2 Randolph Road Hanscom AFB, MA 01731 *Mr. Enrico Cappucci* *339-202-3934*	Building 1200 Renovations Camp Edwards, Bourne, MA	In Progress	$1,100,550
National Medical Care 1601 Trapelo Road Waltham, MA 02154 *Mr. Joe Micalizzi* *(617) 466-9850*	Interior Renovations BMA - Framingham, Massachusetts	1988	$225,000

National Medical Care 1601 Trapelo Road Waltham, MA 02154 *Mr. Joe Micalizzi* *(617) 466-9850*	Additions & Renovations BMA - Cape Cod, Massachusetts	1989	$400,000
National Medical Care 1601 Trapelo Road Waltham, MA 02154 *Ms. Karen Vos* *(617) 466-9850*	Interior Renovations BMA - Saugus, Massachusetts	1990	$223,500
National Medical Care 1601 Trapelo Road Waltham, MA 02154 *Ms. Karen Vos* *(617) 466-9850*	Interior Finish-Out to Create Kidney Dialysis Center Fremont, California	1991	$286,900
National Medical Care 1601 Trapelo Road Waltham, MA 02154 *Ms. Karen Vos* *(617) 466-9850*	Interior Finish-Out to Create Kidney Dialysis Center Portsmouth, New Hampshire	1992	$212,742
National Medical Care 1601 Trapelo Road Waltham, MA 02154 *Ms. Karen Vos* *(617) 466-9850*	Interior Finish-Out to Create Kidney Dialysis Center Plano, Texas	1993	$500,000
National Medical Care 1601 Trapelo Road Waltham, MA 02154 *Ms. Karen Vos* *(617) 466-9850*	Interior Finish-Out to Create Kidney Dialysis Center Wellington, Florida	1993	$215,000
National Medical Care 1601 Trapelo Road Waltham, MA 02154 *Ms. Karen Vos* *(617) 466-9850*	Interior Finish-Out to Create Kidney Dialysis Center Irvington, New Jersey	1994	$487,750

National Medical Care 1601 Trapelo Road Waltham, MA 02154 *Ms. Karen Vos* *(617) 466-9850*	Interior Finish-Out to Create Kidney Dialysis Center North Providence, Rhode Island	1993	$327,000
National Medical Care 1601 Trapelo Road Waltham, MA 02154 *Ms. Karen Vos* *(617) 466-9850*	Interior Finish-Out to Create Diabetic Foot Care Facility Paramus, New Jersey	1993	$325,000
National Medical Care 1601 Trapelo Road Waltham, MA 02154 *Mr. Paul Birkhauser* *(617) 466-9850*	Interior Finish-Out BMA - Warwick, Rhode Island	1992	$350,000
National Medical Care 1601 Trapelo Road Waltham, MA 02154 *Mr. Ed McGinley* *(617) 466-9850*	Interior Finish-Out Appleton, Wisconsin	1992	$175,000
National Medical Care 1601 Trapelo Road Waltham, MA 02154 *Ms. Karen Vos* *(617) 466-9850*	Expansion Woonsocket, Rhode Island	1995	$114,000
NEPTCO 30 Hamlet Street Pawtucket, RI 02860 *Mr. Richard Pond* *(401) 722-5500*	Renovations and Additions	2001	$2,000.000
New England Health Enterprises 110 Liberty Street Brockton, MA *Mr. Kevin McManus* **978-369-1290**	MRI Facility Bridgewater, MA	2004	$125,000

New England Telephone 245 State Street Boston, MA 02109 *Mr. David Hill* *(617) 574-1068*	Interior & Exterior Improvements to BCSC Framingham, Massachusetts	1990	$560,000
New England Treatment Access 5 Forge Parkway Franklin, MA *Mr. Arnon Vered* *617-838-2168*	New Cultivation Facility / Renovations	In Progress	$5,000,000
City of Newport Housing Authority 120B Hillside Ave. Newport, RI 02804 *Mr. James Reed* *401-847-0185*	Weideman Court – New Ground up Housing (4 houses)	2012	$1,128,985
Nick's Realty Trust 46 Chauncy Street Mansfield, MA 02048 *Mr. Nick Anagnos* *(508) 399-9556*	New Automatic Car Wash & 3 Self-Wash Bays Mansfield, Massachusetts	1987	$300,000
Nick's Realty Trust 46 Chauncy Street Mansfield, MA 02048 *Mr. Nick Anagnos* *(508) 399-9556*	Addition to Auto Body Shop Mansfield, Massachusetts	1994	$250,000
Town of Norfolk Highway Department 33 Medway Branch Norfolk, MA 02056 *Mr. Remo (Butch) Vito* *508-528-4990*	Garage Addition	2003	$73,800
Northrop Grumman 88 Silva Lane Middletown, RI *Ms. Joanne Boudreaux* *401-849-5300*	Interior Renovations	2005	$102,000

Northrop Grumman 88 Silva Lane Middletown, RI *Mr. Scott Williams* *401-265-3458*	Conference Room Renovations	2014	$137,140
Town of North Attleboro 43 South Washington Street North Attleboro, MA 02760 *Ms. Sue Harvey* *508-699-0100*	Gymnasium Renovations	2009	$346,000
Town of North Attleboro 43 South Washington Street North Attleboro, MA 02760 *Mr. Mark Fisher* *508-699-0100*	Fire Alarm / Fire Door Project Community School and Falls School	2011	$562,530
OCG Microelectronic Materials 200 Massasoit Avenue East Providence, RI 02914 *Mr. Tony Zullo* *(401) 438-7805*	Upgrade Raw Materials Process Area Providence, Rhode Island	1993	$264,500
OCG Microelectronic Materials 200 Massasoit Avenue East Providence, RI 02914 *Mr. Tony Zullo* *(401)* 438-7805	Construction of Polyimide Instrument Rooms and Clean Room Providence, Rhode Island	1993	$280,000
Paolino Properties / Weybosset Hill Inv. 76 Dorrance Street Providence, RI *Mr. Joseph Paolino* *(401) 274-6611*	Lobby Renovations	2000	$350,000
Paolino Properties 76 Dorrance Street Providence, RI *Mr. Joseph Paolino, Sr.* *(401) 274-6611*	Structural renovations 70 Dorrance Street Providence, RI	2000	$20,000

Paolino Properties 76 Dorrance Street Providence, RI *Mr. Joseph Paolino, Sr.* *(401) 274-6611*	Renovations to restaurant Newport RI	2000	$40,000
Paolino Properties 76 Dorrance Street Providence, RI *Mr. Arthur Lima* *(401) 274-6611*	Office Renovations 77 Eddy Street Providence, RI	2000	$40,000
Paolino Properties 76 Dorrance Street Providence, RI *Mr. Arthur Lima* *(401) 274-6611*	Addition to former Bank Barrington, RI	2001	$75,000
Paolino Properties 76 Dorrance Street Providence, RI Mr. Arthur Lima 401-274-6611	Village Green II	2013	$250,000
828 Park Ave. LLC 7 Scott Drive Lincoln, RI 02865 *Mr. Ernest J. Nadeau* *508-399-6776*	Mill Conversation / Condominiums	2007	$2,475,000
1283 Park Street North Attleboro, MA *Mr. Gerald Smith* 508-643-4551	Fire Safety Improvements	2004	$67,000
Parlex Corporation 28 Kenny Drive Cranston, RI 02920 Mr. Ed Simpson 401-463-3180	Renovations / Demolition	2008	$193,050

65 Pavilion Ave. LLC 65 Pavilion Ave. Providence, RI *Mr. David Piccoli Sr.* *401-780-2300*	Renovations to Historical Bldg.	2005	$1,056,600
City of Pawtucket School Department Park Place Pawtucket, RI 02860 *Mr. Donald L. Mailhot* *(401) 729-6350*	School Buildings Renovations Pawtucket, Rhode Island	1996	$257,244
Perot Systems 444 Westminster Street Providence, RI *Bradley Gagnon* *401-459-4004*	Office Renovations	2006	92,450
D.L. Piccoli & Associates/ **D'Pico Interior Design** 1319 Cranston Street Cranston, RI 02920 *Mr. David Piccoli* *(401) 943-1810*	Interior Renovations to Wallach's, Inc. Warwick, Rhode Island	1984	$50,000
D.L. Piccoli & Associates/ **D'Pico Interior Design** 1319 Cranston Street Cranston, RI 02920 *Mr. David Piccoli* *(401) 943-1810*	Kennedy's (Warwick Mall) Warwick, Rhode Island	1990	$265,000
Picillo Superfund Site 200 Piggy Lane Coventry, RI 02816 *Mr. Chris Hewison* *(315) 437-6440*	4,000 square foot Site Pollution Remediation Building	1999	$323,000
Pleasant Street Congregational Church 75 Pleasant Street Arlington, MA 02476 *Mr. Jeff Howry* *781-405-2547*	Renovations to Church	2008	$78,580

Plymouth Church 582 Pleasant Street Belmont, MA 02478 *Mr. Bill Turville* *781-648-4858*	Patio Waterproofing and Masonry Repairs	2011	$92,000
Pollard Middle School 200 Harris Ave. Needham, MA *Mr. Steve Stewart* *(781)453-8040*	Cafeteria and Corridor Construction	2002	$575,000
Poly-Flex Circuits 28 Kenney Drive Cranston, RI 02920 *Mr. Ed Simpson* *(401) 463-3180*	28,000 square foot Manufacturing & Laboratory Addition Cranston, Rhode Island	1991	$1,500,000
Poly-Flex Circuits 28 Kenney Drive Cranston, RI 02920 *Mr. Ed Simpson* *(401) 463-3180*	Various Interior Renovation Projects Cranston, Rhode Island	1994	$100,000
Poly-Flex Circuits 28 Kenney Drive Cranston, RI 02920 *Mr. Ed Simpson* *(401) 463-3180*	Demolition and construction for new production line	2001	$30,000
Portsmouth Housing Authority 2368 East Main Road P.O. Box 118 Portsmouth, RI 02871 *Mr. James Dilley* *(401) 683-3173*	Interior Renovations Quaker Manor Housing Project Portsmouth, Rhode Island HUD Funded	1992	$316,885
Progressive Radiology 100 Fulford Ave. Bel Air, MD 21014 *Mr. Michael Green* *443-299-7698*	New MRI & Improvements	2012	$315,400

Providence Journal Company **C/O Angeli Design** 182 Butler Ave. Providence, RI *Annette Angeli* *401-351-1150*	Renovations to Executive Suite Providence, RI	2000	$25,000
Retina Consultants 690 Eddy Street Providence, RI *Ms. Karen Woodcome*	Conference Room & Break Room Renovations	2008	$160,000
R I Medical Imaging 20 Catamore Boulevard East Providence, RI 02919 Ms. Janet Petrarca (401)432-2452	MRI Suite One Randal Square Providence, RI	2001	$384,000
R. I. Medical Imaging 20 Catamore Boulevard East Providence, RI 02919 *Ms. Janet Petrarca* *(401) 432-2452*	Interior Renovations Toll Gate Road Warwick, RI	1998	$81,500
R. I. Medical Imaging 20 Catamore Boulevard East Providence, RI 02919 *Ms. Janet Petrarca* *(401) 432-2452*	Interior Renovations Greenville, Rhode Island	1998	$51,500
RI Medical Imaging 20 Catamore Boulevard East Providence, RI 02919 *Ms. Janet Petrarca* *(401) 432-2452*	Interior Renovations School Street Pawtucket, Rhode Island	1998	$80,000
RI Medical Imaging 20 Catamore Boulevard East Providence, RI 02919 *Ms. Janet Petrarca* *(401) 432-2452*	Interior Renovations Catamore Boulevard East Providence, Rhode Island	1998	$140,000

RI Medical Imaging 20 Catamore Boulevard East Providence, RI 02919 *Ms. Janet Petrarca* *(401) 432-2452*	Home Office Renovations	1998	$148,000
R.I. Medical Imaging 20 Catamore Boulevard East Providence, RI 02919 *Ms. Janet Petrarca* *(401) 432-2452*	MRI Suite, Barrington Medical Center	2000	$240,000
R.I. Medical Imaging 20 Catamore Boulevard East Providence, RI 02919 *Ms. Janet Petrarca* *(401) 432-2452*	Interior Renovations for CT Suite East Providence, Rhode Island	1999	$8,500
R.I. Medical Imaging 20 Catamore Boulevard East Providence, RI 02919 *Ms. Janet Petrarca* *(401) 432-2452*	MRI Suite East Greenwich, Rhode Island	1999	$170,000
R.I. Medical Imaging 20 Catamore Boulevard East Providence, RI 02919 *Ms. Janet Petrarca* *(401) 432-2452*	Interior Renovations Barrington Medical Center East Providence, Rhode Island	2000	$167,000
R.I. Medical Imaging 20 Catamore Boulevard East Providence, RI 02919 *Ms. Janet Petrarca* *(401) 432-2452*	MRI Suite School Street East Providence, Rhode Island	1999	$278,000
R.I. Medical Imaging 20 Catamore Boulevard East Providence, RI 02919 *Ms. Janet Petrarca* *(401) 432-2452*	Doctors Office 206 East Providence, Rhode Island	2000	$ 16,500

R.I. Medical Imaging 20 Catamore Boulevard East Providence, RI 02919 *Ms. Janet Petrarca* *(401) 432-2452*	Lobby Renovations North Main Imaging Providence, RI	2000	$9,000
R.I. Medical Imaging 20 Catamore Boulevard East Providence, RI 02919 *Ms. Janet Petrarca* *(401) 432-2452*	Office Renovations Phase 111 Pawtucket, Rhode Island	2000	$47,000
R.I. Medical Imaging 20 Catamore Boulevard East Providence, RI 02919 *Ms. Janet Petrarca* *(401) 432-2452*	New Nuclear Medicine Facility 1 Randall Square Providence, RI	2002	$65,000
R.I. Medical Imaging 20 Catamore Boulevard East Providence, RI 02919 *Ms. Janet Petrarca* *(401) 432-2452*	HVAC Improvements	2002	$86,300
R. I Medical Imaging 20 Catamore Boulevard East Providence, RI *Ms. Janet Petrarca* 401-432-2452	MRI Facility, East Greenwich, RI	2004	$380.000
R.I. Medical Imaging 20 Catamore Boulevard East Providence, RI 02919 *Ms. Janet Petrarca* *401-432-2452*	Randall 4th Floor X Ray Providence, RI	2005	$80,000
R. I. Medical Imaging 20 Catamore Boulevard East Providence, RI 02919 *Ms. Janet Petrarca* *401-432-2452*	Randall Dark Room Providence, RI	2005	$13,200

R.I. Medical Imaging 20 Catamore Boulevard East Providence, RI 02919 *Ms. Janet Petrarca* *401-432-2452*	MRI 2, Providence, RI	2005	$615,000
R. I. Medical Imaging 20 Catamore Boulevard East Providence, RI 02919 *Ms. Janet Petrarca* *401-432-2452*	Back Up Generator	2005	$120,000
R.I. Medical Imaging 20 Catamore Boulevard East Providence, RI 02919 *Ms. Janet Petrarca* *401-432-2452*	Barrington Medical Center Code Upgrade	2006	$51,295
R.I. Medical Imaging 20 Catamore Boulevard East Providence, RI 02919 *Ms. Janet Petrarca* *401-432-2452*	New Imaging Center Lincoln, RI	2006	$1,000,000
R.I. Medical Imaging 20 Catamore Boulevard East Providence, RI 02919 *Ms. Janet Petrarca* *401-432-2452*	Renovations to Ct Room East Greenwich, RI	2006	$150,000
R.I. Medical Imaging 20 Catamore Boulevard East Providence, RI 02919 *Ms. Janet Petrarca* 401-432-2452	Barrington Medical Center CT – Interior Renovations	2007	$179,000
R.I. Medical Imaging Catamore Boulevard East Providence, RI 02919 *Ms. Janet Petrarca* *401-432-2452*	RI Vascular	2007	$650,000

RI Medical Imaging Catamore Boulevard East Providence, R I *Ms. Janet Petrarca* *401-432-2452*	RI Vascular Interior Renovations To Lobby	2009	$137,000
RI Medical Imaging Catamore Boulevard East Providence, R I *Ms. Janet Petrarca* *401-432-2452*	East Greenwich 3T MRI Renovation	2011	$500,000
RI Medical Imaging Catamore Boulevard East Providence, RI *Ms. Janet Petrarca* *401-432-2452*	Randall Square CT Renovation	2011	$185,500
RI Medical Imaging Catamore Boulevard East Providence, RI Ms. Janet Petrarca 401-432-2452	Barrington Medical Center Building Addition	2012	$750,000
RI Medical Imaging Catamore Boulevard East Providence, RI Ms. Janet Petrarca 401-432-2452	East Greenwich, RI Lobby Renovations	2012	$39,000
RI Medical Imaging Catamore Boulevard East Providence, RI Ms. Janet Petrarca 401-432-2452	East Providence, RI New Medical Imaging Suite	In Progress	$1,000,000
RI National Guard U.S. Property & Fiscal Office for RI 330 Camp Street Providence, RI 02906 Mona Morin **401-275-4248**	Camp Varnum RTI Security Fencing Smithfield, RI	2013	$650,000

RI Air National Guard USPFO For RI 330 Camp Street Providence, RI 02906 *Lt. Timothy Caron* *401-275-4282*	Security Fence No. Smithfield ANGS	In Progress	1,050,000
Rhode Island Public Transit Authority 265 Melrose St. Providence, RI *Mr. Michael McGrane* *401-784-9500*	Renovation to CNG Modification	2003	$861,400
Rhode Island Public Transit Authority 265 Melrose St. Providence, RI *Mr. Michael McGrane* *401-784-9500*	Ticket Vending Machines Delivery and Installation, Various RI Locations	In Progress	$506,150
Rhode Island Public Transit Authority 265 Melrose St. Providence, RI *Mr. Michael McGrane* *401-784-9500*	New Lifelines / Installation of Fall Protection	In Progress	$75,000
27 River Street West Warwick, RI *Ann Reali* *401-828-4761*	Fire Damage Restoration	2007	$185,000
Rosecraft, Inc. 685 Social Street Woonsocket, RI 02895 *Mr. Ray Laferriere* *(401) 766-9400*	Office Space Renovations Woonsocket, Rhode Island	1987	$200,000
Rust-Oleum Corporation 113 Olive Street Attleboro, MA 02703 *Mr. Larry Ostaszewski* *508-222-3710*	Building Renovation	2011	150,000

Rust-Oleum Corporation 113 Olive Street Attleboro, MA 02703 *Mr. Dan Mundy* *732-735-4474*	Building 9, Pre-Engineered Metal Structure Above Existing Building	2012	$384,838
Rust-Oleum Corporation 113 Olive Street Attleboro, MA 02703 *Mr. Dan Mundy* *732-735-4474*	Building 3 & 8, Installation of New Helical Piers In Structural Concrete Foundations	2012	$521,960
Saint Ann's Hospital 795 Middle Street Fall River, MA 02721 *Mr. Frank Thomson*	Interior Renovations	2007	$85,000
Saint James Condominiums 626 Smithfield Ave. North Providence, RI *Ms. Peggy Sarault* *401-353-7753*	Firewall Repairs	2004	$202,851
Salvation Army 201 Pitman Street Providence, RI 02906 *Major Alan Thompson* *(401) 421-5270*	Interior Renovations Recreation/Canteen Area Providence, Rhode Island	1991	$125,000
Salvation Army 201 Pitman Street Providence, RI 02906 *Major Alan Thompson* *(401) 421-5270*	Interior Renovations to Chapel Providence, Rhode Island	1992	$70,000
Salvation Army 201 Pitman Street Providence, RI 02906 *Major Alan Thompson* *(401) 421-5270*	Fire Safety Upgrade Providence, Rhode Island	1994	$114,500

Salvation Army 209-233 Broadway Saugus, MA 01906 *Major Alan Thompson* *(781) 231-0803*	Renovations Saugus, Massachusetts	1994	$25,100
Salvation Army 201 Pitman Street Providence, RI 02906 *Major Alan Thompson* *(401) 421-5270*	Daycare Renovations Providence, Rhode Island	1995	$14,900
Salvation Army 386 Broad Street Providence, RI 02907 *Major Charles Dietrick* *(401) 421-0956*	Renovations to 32 Commercial Street Cranston, RI	1998	$62,000
Salvation Army 885 Asylum Avenue Hartford, CT 06105 *Major Charles Dietrick* *(860) 543-8400*	Citadel Connector	2002	$676,000
Salvation Army 26 Wales Street Drochester, MA 02124 *Mr. William Ticehurst* *617-542-5420*	Children's Learning Center Site and Interior Renovations	2003	$1,270,000
Salvation Army 209 Broadway Saugus, MA 01906 *Major Leo Lloyd* *781-231-0803*	Somerville Thrift Store Renovations	2006	$131,400
Salvation Army 440 W. Nyack Road West Nyack, NY 10944 *Mr. Mark Estees* *508-496-7066*	Saugus Thrift Store Interior Renovations	2013	627,000

Savers Inc. 11400 South East 6th Street, Suite 220 Bellevue, WA 98004 *Mr. Kirk Bezanson* *425-456-1757*	Retail Renovations No. Attleboro, MA	2010	$287,000
Savers Inc. 11400 South East 6th Street, Suite 220 Bellevue, WA 98004 *Mr. Kirk Bezanson* *425-456-1757*	Retail Renovations Framingham, MA	2010	$377,200
Town of Seekonk, MA 100 Peck Street Seekonk, MA 02771 *Ms. Pam Nolan* *508-336-2912*	Seekonk Banna Memorial Fire Station New Modular Fire Station	In Progress	$1,197,500
Shields Healthcare Group 700 Congress Street Suite 204 Quincy, MA 02169 *Mr. Steven McCarthy* *800-258-4674*	Phase II, MRI Installation	2003	$268,000
Smart Management 66 Pavillion Ave. Providence, RI *Mr. David Piccoli* *401-780-2300*	Addition	2002	$550,000
South Shore Housing 169 Summer Street Kingston, MA 02364 *Ms. Emily Weitzman* *(781) 585-3885*	Housing Project Carpenters Glen Apartments Taunton, Massachusetts HUD Funded	1998	$2,350,000
State of Rhode Island MHRH Howard Complex Cranston, RI 02910 *Mr. Ed Rudegeari* *(401) 464-3043*	Renovations to Patient Shower & Toilet Facilities	2000	$209,000

Stello Construction Inc. 110 Tanglewood Drive South Chatham, MA 02659 *Mr. Bob Stello* *(508) 432-2218*	Pre-Engineered Metal Building Chatham, MA	1998	$75,600
Stern Metals 110 Frank Mossberg Drive Attleboro, MA 02703 *Mr. Fred Hammerle* *(508) 226-6121*	Office Building Attleboro, Massachusetts	1989	$515,000
Storm Duds 100 Frank Mossburg Dr. Attleboro, MA 02703 *Mr. Tim Baurley* *508-222-0155*	New Addition	2006	$370,000
Sturdy Memorial Hospital 211 Park Street Attleboro, MA 02703 *Mr. Ned Cooke* *(508) 236-8575*	O.R. Renovations & Expansion 211 Park Street Attleboro, Massachusetts	1997	$161,500
Sun Life Financial 175 Addison Road Windsor, CT 06095 *Mr. Greg Rahuba* *617-462-3676*	4th Floor Renovations	2013	$75,000
Town of Sutton 4 Uxbridge Road Sutton, MA *Mr. Pat Nedoroscik* *508-865-8720*	New Weather Tight Shells for The Wilkensonville Station and The Manchaug Station	2004	$739,400
T.F. Green Airport 2000 Post Road Warwick, RI 02886 *Mr. Jose DaSilva* *(401) 737-4000*	Improvements to Hangers # 1 and # 2	2001	$300,000

Tollgate Radiology, Inc. 215 Tollgate Road Warwick, RI 02886 Dr. Coscina (401) 738-3100	New MRI Facility	2000	$376,000
Town of West Warwick 1170 Main Street West Warwick, RI 02893 *Mr. Jeff Rouselle* *(401) 821-3260*	Pre-engineered Metal Building School Maintenance Building West Warwick, RI	1998	$168,600
Travelers Aid Society of Rhode Island 177 Union Street Providence, RI 02903 *Mr. Fred Tripassi* *(401) 521-2255*	Housing Rehabilitation Renovations Phase I North Kingstown, Rhode Island	1995	$757,000
Travelers Aid Society of Rhode Island 177 Union Street Providence, RI 02903 *Mr. Fred Tripassi* *(401) 521-2255*	Housing Rehabilitation Renovations Phase II North Kingstown, Rhode Island	1995	$397,500
Travelers Aid Society of Rhode Island 177 Union Street Providence, RI 02903 *Mr. Fred Tripassi* *(401) 521-2255*	Daycare Renovations North Kingstown, Rhode Island	1995	$127,000
Travelers Aid Society of Rhode Island 177 Union Street Providence, RI 02903 *Mr. Fred Tripassi* *(401) 521-2255*	Renovations 267 Webster Avenue Providence, RI	1999	$94,000
Turner Free Library Town of Randolph 2 North Main Street Randolph, MA 02368 *Mr. Charles Michaud* *(781) 961-0923*	Handicapped Accessibility Renovations Randolph, Massachusetts	1998	$246,000

United States Coast Guard Facilities Design & Construction Center 5505 Robin Hood Road, Suite K Norfolk, VA 23513-2431 *Lt. Robert Bevins* *(757) 858-6238*	Pre-engineered Metal Building USCG Air Station Bourne, MA	1998	$799,940
United States Coast Guard Facilities Design & Construction Center 5505 Robin Hood Road, Suite K Norfolk, VA 23513-2431 *Mr. Alan Trow* *(401) 736-1752*	Building Addition Hull, MA	2001	$250,000
United States Coast Guard Facilities Design & Construction Center 5505 Robin Hood Road, Suite K Norfolk VA 23513-2431 *Mr. Alan Trow* *(401) 736-1752*	New Building Scituate, MA	2001	$348,000
United States Fish & Wildlife Contracting & General Services 300 Westgate Center Drive Hadley, MA 01035 *Mr. Dale E. Aubin* *413-253-8230*	Construction of a Visitors Contact Station Newburyport, MA	2010	$612,000
United States Fish & Wildlife Contracting & General Services 300 Westgate Center Drive Hadley, MA 01035 Ms. Marsha Browning 413-253-8236	Oxbow Visitor's Contact Station Ground Up Pavilion and Bathhouse	2013	$1,078,000
University of Massachusetts Boston 100 Morrissey Boulevard Boston, MA 02125 Ms. Martha Kelly 617-287-5060	Campus Center Atrium #1 Renovations	2013	$563,118

University of Massachusetts Dartmouth 285 Old Westport Road North Dartmouth, MA *Mr. Peter Gelvnacher* *508-999-8938*	UMASS Dartmouth Textile Renovations	2008	$842,600
University of Massachusetts Dartmouth 285 Old Westport Road North Dartmouth, MA Mr. Peter Gelvacher 508-999-8938	UMASS Structural	2008	$446,900
University of Massachusetts Medical School Facilities Management 55 Lake Avenue North Worcester, MA 01655 *Mr. Ed Martineit* *(508) 856-6828*	Emergency Department Observation Beds Worcester, Massachusetts	1997	$218,400
University of Massachusetts Medical School Facilities Management 55 Lake Avenue North Worcester, MA 01655 *Mr. Ed Martineit* *(508) 856-6828*	Conference Room Renovations Worcester, Massachusetts	1997	$74,966
University of Massachusetts Medical School Facilities Management 55 Lake Avenue North Worcester, MA 01655 *Mr. Ed Martineit* *(508) 856-6828*	Shaw Building Alterations/Renovations 2nd floor Worcester, Massachusetts	1997	$775,870
University of Massachusetts Medical School Facilities Management 55 Lake Avenue North Worcester, MA 01655 *Mr. Paul Frazier* *(508) 856-1773*	Surgical Learning Center Worcester, Massachusetts	1997	$377,775

University of Massachusetts Medical School Facilities Management 55 Lake Avenue North Worcester, MA 01655 Mr. Brian Duffy	Tissue Culture & Equipment Room Renovations Worcester, Massachusetts	2008	$102,830
University of Massachusetts Medical School Facilities Management 55 Lake Avenue North Worcester, MA 01655 *Mr. Dan Richie* *508-856-6738*	Amphitheatre Renovations	2009	479,000
University of Rhode Island Kingstown, RI *Mr. Dennis Jones* *(401) 792-2151*	Fine Arts Building Window Replacement Kingstown, Rhode Island	1990	$250,000
University of Rhode Island 523 Plains Road Suite 1 Kingston, RI 02881 *Mr. Don Krasko* *(401) 874-2003*	85 Briar Lane Construction of Entry Vestibule & Interior Renovations Kingston, RI	1997	$127,622
University of Rhode Island 90 Campus Avenue Kingston, RI 02881 *Mr. Robert Ornstein* *(401) 274-4438*	President's House Interior & Exterior Renovations	1999	$123,000
University of Rhode Island Bay Campus Narragansett, RI 02882 *Mr. Raymond Carroll, Jr.* *(401) 874-5603*	Wood Frame Lab Building	1999	$201,187
Department of Veterans Affairs Medical Center 830 Chalkstone Avenue Providence, RI 02908 *Mr. Patrick Cantwell* *(401) 457-3032*	Renovation of O.R. Space Support Staff Providence, Rhode Island	1992	$121,856

Department of Veterans Affairs Medical Center 830 Chalkstone Avenue Providence, RI 02908 *Mr. Patrick Cantwell* *(401) 457-3032*	Fire & Safety Compliance Providence, Rhode Island	1992	$381,700
Department of Veterans Affairs Medical Center 830 Chalkstone Avenue Providence, RI 02908 *Mr. Patrick Cantwell* *(401) 457-3032*	Renovation of Ward 5B Providence, Rhode Island	1995	$1,459,000
Department of Veterans Affairs Medical Center 830 Chalkstone Avenue Providence, RI 02908 *Mr. Patrick Cantwell* *(401) 457-3032*	Renovation to Dietetics Kitchen Providence, Rhode Island	1994	$297,680
Department of Veterans Affairs Medical Center 830 Chalkstone Avenue Providence, RI 02908 *Mr. Patrick Cantwell* *(401) 457-3032*	Renovation of Room #502 Providence, Rhode Island	1995	$8,900
Department of Veterans Affairs Medical Center 830 Chalkstone Avenue Providence, RI 02908 *Mr. Patrick Cantwell* *(401) 457-3032*	Relocation of Ward 4B Providence, Rhode Island	1995	$14,000
Department of Veterans Affairs Medical Center 830 Chalkstone Avenue Providence, RI 02908 *Mr. Patrick Cantwell* *(401) 457-3032*	Renovations of Ward 4B Providence, Rhode Island	1996	$1,338,400
Department of Veterans Affairs Medical Center 940 Belmont Street Brockton, MA 02401 *Ms. Suzanne Letendre* *(617) 583-4500*	Roof Repairs Brockton, Massachusetts	1996	$498,605

Department of Veterans Affairs Medical Center 830 Chalkstone Avenue Providence, RI 02908 *Mr. Patrick Cantwell* *(401) 457-3032*	Elevator Upgrade Providence, Rhode Island	1996	$105,000
Department of Veterans Affairs Medical Center 830 Chalkstone Avenue Providence, RI 02908 *Mr. Patrick Cantwell* *(401) 457-3032*	Canteen Renovations Providence, Rhode Island	1996	$50,000
Department of Veterans Affairs Medical Center 830 Chalkstone Avenue Providence, RI 02908 *Mr. Bill Shepherd* *(401) 273-7100*	Renovations/Outpatient Ward 1B Providence, Rhode Island	1997	$515,000
Department of Veterans Affairs Medical Center 830 Chalkstone Avenue Providence, RI 02908 *Mr. Bill Shepherd* *(401) 457-3032*	Fire Alarm / Safety Improvements Providence, Rhode Island	2000	$272,000
Valley Gas 1595 Mendon Road Cumberland, RI 02864 *Mr. Cliff Richer* *(401) 333-1595*	Fire and Safety Upgrade Cumberland, Rhode Island	1994	$114,500
Fairlawn Veterans Pool Legion Ave. Pawtucket, RI 02861 *Mr. Tom Willet* *401-724-5200*	Renovations to Pool	2003	$449,000
Victoria + Company 10 New Rd. East Providence, RI 02919 *Mr. Rick Andreoli* *401-435-9220*	Construction of a new computer room	2001	$75,000

Victoria + Company 10 New Rd. East Providence, RI *Mr. Rick Andreoli* 401-435-9220	Interior Renovations	2002	$1,000,000
Waldenbooks Company 201 High Ridge Road Stamford, CT 06904 *Mr. Fred Carew* *(203) 352-2000*	Store Renovations Newport Mall Newport, Rhode Island	1995	$114,500
City of Waltham, MA 610 Main Street Waltham, MA 02452 *Mr. James McGrath* *781-314-3244*	Construction Of a New Elevator 155 Lexington Street Waltham Police Station	2011	$352,550
City of Waltham, MA 610 Main Street Waltham, MA 02452 *Mr. James McGrath* *781-314-3244*	Construction Of a New Elevator 25 Lexington Street Waltham Museum	2011	$338,710
Warwick Mall 400 Bald Hill Road Warwick, RI 02886 *Mr. Tom Aversa* *401-739-7500*	Demolition	2004	$30,000
Warwick Mall 100 Warwick Mall Warwick, RI 02886 *Mr. Jim Curcio* *(401) 739-7500*	Office Renovations Warwick, Rhode Island	1994	$3,095
West Warwick Housing Authority 62 Robert Street West Warwick, RI 02893 *Ms. Kristen Swanson* *(401) 822-9430*	Office Renovations West Warwick Manor West Warwick, Rhode Island HUD Funded	1995	$203,780

West Warwick Housing Authority 62 Robert Street West Warwick, RI 02893 *Ms. Kristen Swanson* *(401) 822-9430*	Apartment Renovations West Warwick Manor West Warwick, Rhode Island HUD Funded	1997	$1,169,200
Westerly Cable 169 Weyboset Street Providence, RI 02903 *Mr. Mark Spatz* *(401) 596-0156*	New Office Building on Canal Street Westerly, Rhode Island	1989	$535,000
Westerly Cable 169 Weyboset Street Providence, RI 02903 *Mr. Mark Spatz* *(401) 596-0156*	Building Addition Westerly, Rhode Island	1989	$77,500
Women & Infants' Hospital 101 Dudley Street Providence, RI 02905 *Mr. Keith Davignon* *(401) 461-7771*	Out-Patient Clinic Construction Professional Office Building Woonsocket, Rhode Island	1995	$327,000
Woods Hole, Martha's Vineyard & Nantucket Steamship Authority P.O. Box 184 1 Railroad Ave. Woods Hole, MA 02543 Mr. Wayne C. Lamson 508-548-5011	Terminal Men's Room Renovation	2013	$95,000
Woods Hole, Martha's Vineyard & Nantucket Steamship Authority P.O. Box 184 1 Railroad Ave. Woods Hole, MA 02543 Mr. Wayne C. Lamson 508-548-5011	Vineyard Haven Terminal Restroom Renovation	2013	$199,987

Wong Holdings LLC 670 Washington Street Attleboro, MA 02703 *Mr. Baily Long* *508-399-8020*	670 Washington Street Renovations & Addition	In Progress	$590,000
Worcester County Sheriff's Office 5 Paul X. Tivnan Drive Worcester, MA 01583 Mr. Peter Whitney 508-854-1800	Sallyport Renovations	2010	$134,000
Woonsocket Housing Authority 679 Social Street Woonsocket, RI 02895 *Mr. Duncan Speel* *401-767-8029*	Interior Renovations HUD Funded	2003	$710,908
Worcester State College 486 Chandler Street Worcester, MA 01602 Ms. Nicole LeBlanc 508-929-8462	ARRA 7-011-265 Classroom Labs Adaption	2010	$251,500
YMCA of Pawtucket, Inc. 20 Summer Street Pawtucket, RI 02860 *Mr. Dana Newbrook* *401-728-2560*	Camp Westwood Toilet Facilities Coventry, Rhode Island	1997	$144,725
YMCA of Pawtucket, Inc. 26 Breakneck Hill Road Lincoln, RI 02865 *Mr. Dana Newbrook* *401-728-2560*	New Pool and Bathhouse MacCall Field Pool Lincoln, RI	1998	$1,000,000
X Ray Associates 6725 Post Road North Kingstown, RI 02852 *Mr. Peter Porter* *(401) 886-4887*	Middletown MRI Facility	2003	$590,000

X Ray Associates 6725 Post Road North Kingston, RI 02852 *Mr. Peter Porter* *401-886-4887*	Johnston MRI Facility	2003	$161,000
X Ray Associates 6725 Post Road North Kingstown, RI 02852 *Mr. Peter Porter* *401-866-4887*	Middletown Mammography Suite	2005	$80,000
X Ray Associates 6725 Post Road North Kingstown, RI 02852 *Ms. Carol Wordell* *401-886-4830*	CT Swap Wakefield, RI	2005	$148,500
X Ray Associates 6725 Post Road North Kingstown, RI *Ms. Carol Wordell* *401-886-4830*	New MRI Suite Johnston, RI	2006	$839,000
X Ray Associates 6725 Post Road North Kingstown, RI *Mr. Philip Lynch* *401-886-4830*	MRI Swap Wakefield, RI	2005	$207,400
X Ray Associates 6725 Post Road North Kingstown, RI *Mr. Philip Lynch* *401-886-4830*	New MRI Facility Warwick, RI	2006	$300,000
X Ray Associates 6725 Post Road North Kingstown, RI *Mr. Philip Lynch* *401-886-4830*	Wakefield Finishes	2006	$218,700

X Ray Associates 6725 Post Road North Kingstown, RI 02852 *Mr. Philip Lynch* 401-886-4830	New Imaging Center Cranston	2007	$2,259,380
X Ray Associates 6725 Post Road North Kingstown, RI 02852 *Mr. Philip Lynch* *401-886-4830*	Demolition / Reconstruction 1140 Reservoir Ave.	2008	$34,000

ERNEST J. NADEAU, PRESIDENT

Roger Williams College
Bachelor of Science in Engineering 1971

Registered Professional Engineer

State of Massachusetts No. 30507
State of Rhode Island No. 4162

Ernest J. Nadeau is currently the President and sole stockholder of Nadeau Corporation, Construction Development & Engineering, which was formed in April of 1984.

Prior to establishing Nadeau Corporation, Mr. Nadeau was employed by Weststar Associates, Inc., North Attleboro, Massachusetts, as Vice President / Project Manager from 1977 through 1984. His responsibilities included estimating and engineering with overall responsibility for the following:

- Project Field Operations
- Project Construction Systems
- Scheduling
- Architectural, Mechanical, and Electrical Coordination
- Negotiating Subcontracts
- Labor Costs
- Contractor – Owner – Architect Relations

Mr. Nadeau was employed by The Alumiline Corporation of Pawtucket, Rhode Island, as their Chief Estimator from 1973 through 1977.

MARK E. MENARD
RR#1, 2 Acorn Trail
Wyoming, RI 02898
(401) 539-2056

SUMMARY OF EXPERIENCE: Over 20 Years of construction experience, progressing from single-family residence contractor to project manager, superintendent and estimator of multi-million dollar commercial, industrial, and environmental remediation contracts.

OBJECTIVE: Project manager or superintendent position with a company in need of an articulate management and construction professional, skilled in dealing with people at all levels, and able to manage multiple projects successfully from permits through punch lists.

EDUCATION: B. S., Business Administration, University of Rhode Island, Kingston, RI, May, 1979. Management, marketing, and public speaking concentration.
Construction Management Seminar, Dunn and Bradstreet, April, 1986.
Introduction to Lotus Symphony, Entre' Computer Corporation, June, 1987.
Standard First Aid and CPR, RI Red Cross, February 1989.
Hazardous Waste Site Management, Special Services Company, March, 1989.

EXPERIENCE:

10/92 – Present ***Nadeau Corporation, South Attleboro, MA***
Project manager and estimator for general contractor specializing in medical facilities and commercial / indusial construction.

12/91 – 9/92 ***The Quill Company, Cranston, RI***
Owner's representative and consultant during construction of a new $2,000,000.00 office and manufacturing headquarters.

2/90 – 8/91 ***Westview Construction Company, West Greenwich, RI***
Project manager, superintendent, and estimator for site work and general contractor. Property manager of 86-acre mobile home park.

9/86 – 2/90 ***Swepco Corporation, Brooklyn, NY***
Project manager, superintendent, and estimator for general contractor specializing in commercial, industrial, and environmental projects for the U.S. Navy and Army Corps of Engineers

David D'Angelo

126 Old County Road
Smithfield, RI 02917-2931
Home Phone: 401-232-0106
Email: ddangelo126@aol.com

Objective:

To oversee construction of challenging projects in the construction industry nurture emerging talented individuals and to develop client relations.

Qualifications:

Licenses: Boston ABC Unrestricted
Mass Construction Supervisors License
City of Salem MA Builders License

Certifications: New England Construction Users Council
AGC OSHA Training
AGC First Aid and CPR Training

Education:

BS Civil Engineering Wentworth College
AS Civil and Highway Engineering Wentworth Institute

Employment:

Nadeau Corporation:
Estimating / Project Manager

JL Marshall:
Concrete Subcontractor for the following:
Intermodal Train/Plane Station
Harvard Law Post Tensioned Parking Garage
Belmont School Foundations
CVS 150,000 s. f. Office Foundations and Slabs

Rhode Island School of Design:
Construction Director of 43,000 s. f. new Museum Building

AF Lusi Construction:
Construction of Air Maintenance Facility for RI Air National Guard

Bufftree Building:
Historic renovation and adaptive reuse of 5i building into housing

Fluor Daniel:
Supervise the completion of new 150,000 s. f. building for Global Office of Raytheon Corp.

JL Marshall:
Senior Manager for Concrete Sub on the following:
Convocation Center, URI Kingston, RI
10-Story Apartment Complex, Cambridge, MA
22-Story Apartment Building, Boston, MA
38-Story Office Building, Boston, MA
Underground Parking Garage, Cambridge, MA
Airport Intermodal Facility, Warwick, RI
Rental Car Fueling and Wash Facility, Warwick, RI
Foundations R Wellington School, Belmont, MA
Senior Project manager for GC work on the following:
Airport Upgrades Nantucket, Ma & Providence

Westcott Construction Corp:
Sturdy Memorial Hospital, Attleboro, MA
Morton Hospital, Taunton, MA
Mass Eye and Ear Infirmary, Boston, MA
Mass General Hospital, Boston, MA
Holy Family Hospital, Methuen, MA
North Shore Children's Hospital, Salem, MA
Spaulding Rehab Hospital, Boston, MA
Shriners Hospital, Boston, MA
Harvard Pilgrim Health, Providence, RI & Boston, MA
Cape Cod Community Hospital, Barnstable, MA
Tobey Hospital, Wareham, MA

Telecommunications:
AT&T Bangor, ME
AT&T Manchester, NH
AT&T Nashua, NH
AT&T Boston, MA
AT&T Cambridge, MA
AT&T Peabody, MA
AT&T Framingham, MA
AT&T Fairhaven, MA
AT&T Littleton, MA
AT&T Berkley, MA
AT&T Lawrence, MA
AT&T Blackstone, MA
AT&T Middleboro, MA
Verizon Boston, MA
Verizon Littleton, MA
Bechtel/Sprint/Lucent Alliance Various NE Cellular Sites
Nextel Various NE Cellular Sites
Cellular One Various NE Cellular Sites
Omnipoint Various NE Cellular Sites
Verizon Various NE Cellular Sites
AT&T Wireless Various NE Cellular Sites

Metro Media Framingham, MA
Metro Media Providence, RI
Metro Media New London, CT
Metro Media, New Haven, CT

Environmental:
Wastewater Plant and Pump Stations Martha's Vineyard, MA
Wastewater Treatment and Pumping Station Billerica, MA
Primary Sedimentation Improvements Deer Island, Boston, MA
Sewerage Treatment Facilities, Marshfield, MA
East Treatment Plant Fitchburg, MA

High Rise:
Office Building 325 Cambridge St., Boston, MA
Office Building, 99 Summer St., Boston, MA
Office Building, 1 Lincoln St., Boston, MA
New Shriners Hospital, Boston, MA
Apartment Building Cambridge, MA
Apartment Building, Boston, MA
Tel/Com Building, Framingham, MA

Tenant Renovations and Additions:
Texas Instruments, Attleboro, MA
Texas Instruments, Mansfield, MA
Raytheon, Portsmouth, RI
Raytheon, Lexington, MA
Raytheon, Tewksbury, MA
Raytheon, Sudbury, MA
Raytheon, Bedford, MA
Stern Leach/Cookson America, Attleboro, MA
LG Balfour, Attleboro, MA
Handy & Harmon, Attleboro, MA
Howard Sweet Co., North Attleboro, MA
First Bristol Bank, North Attleboro, MA
Digital Equipment, Marlboro, MA
Ocean State Power/Ebasco, Burrillville, RI
Brayton Pt. Power Plant, Somerset, MA

ROBERT WHIRLOW
38 Quincy Street
Providence, RI 02908
(401) 331-1037

MA CONSTRUCTION SUPERVISOR LICENSE #067959

SUMMARY OF EXPERIENCE: Over 20 year's construction experience as a carpenter superintendent on commercial and industrial projects including interior renovations and ground-up facilities.

OBJECTIVE: Project manager or superintendent position with a company in need of an articulate management and construction professional, skilled in dealing with people at all levels, and able to manage multiple projects successfully from permits through punch lists.

EDUCATION: Johnson & Wales College, Providence, RI – 1979 to 1981. Received A.S. in Accounting.

EXPERIENCE:

1986 – Present ***Nadeau Corporation, South Attleboro, MA***
Project superintendent / carpenter for general contractor specializing in medical facilities and commercial / industrial construction.

1983 – 1986 ***Michelettis Restaurant, Providence, RI***
Head Waiter.

1981 – 1983 ***Marriot Corporation, Providence, RI***
Waiter.

1980 – 1981 ***Cozy Catering, Providence, RI***
Cook and waiter.

1978 – 1979 ***NA Philips Controls, Prospect, CT***
Maintenance, carpentry shop.

1976 – 1978 ***Hospital Marketing Services, Naugatuck, CT***
Shipping, receiving and maintenance.

REFERENCES: Available upon request.